PortableGrand

DGX-650B/DGX-650WH

Pedal Unit LP-7AWH(OPTION)

SERVICE MANUAL

DGX-650B

DGX-650WH

■ **CONTENTS**

As for an optional LP-7A/LP-7AWH pedal unit, refer to the LP-7A/LP-5A service manual (CL 001812).

CL 001889

YAMAHA

HAMAMATSU, JAPAN

IMPORTANT NOTICE

This manual has been provided for the use of authorized Yamaha Retailers and their service personnel. It has been assumed that basic service procedures inherent to the industry, and more specifically Yamaha Products, are already known and understood by the users, and have therefore not been restated.

WARNING: Failure to follow appropriate service and safety procedures when servicing this product may result in personal injury, destruction of expensive components and failure of the product to perform as specified. For these reasons, we advise all Yamaha product owners that all service required should be performed by an authorized Yamaha Retailer or the appointed service representative.

IMPORTANT: This presentation or sale of this manual to any individual or firm does not constitute authorization certification, recognition of any applicable technical capabilities, or establish a principal-agent relationship of any form.

The data provided is believed to be accurate and applicable to the unit(s) indicated on the cover. The research engineering, and service departments of Yamaha are continually striving to improve Yamaha products. Modifications are, therefore, inevitable and changes in specification are subject to change without notice or obligation to retrofit. Should any discrepancy appear to exist, please contact the distributor's Service Division.

WARNING: Static discharges can destroy expensive components. Discharge any static electricity your body may have accumulated by grounding yourself to the ground bus in the unit (heavy gauge black wires connect to this bus.)

IMPORTANT: Turn the unit OFF during disassembly and parts replacement. Recheck all work before you apply power to the unit.

WARNING: This product contains chemicals known to the State of California to cause cancer, or birth defects or other reproductive harm.

DO NOT PLACE SOLDER, ELECTRICAL/ELECTRONIC OR PLASTIC COMPONENTS IN YOUR MOUTH FOR ANY REASON WHAT SO EVER!

Avoid prolonged, unprotected contact between solder and your skin! When soldering, do not inhale solder fumes or expose eyes to solder/ flux vapor!

If you come in contact with solder or components located inside the enclosure of this product, wash your hands before handling food.

IMPORTANT NOTICE FOR THE UNITED KINGDOM

Connecting the Plug and Cord

IMPORTANT: The wires in this mains lead are coloured in accordance with the following code:

BLUE : NEUTRAL
BROWN : LIVE

As the colours of the wires in the mains lead of this apparatus may not correspond with the coloured makings identifying the terminals in your plug proceed as follows:
The wire which is coloured BLUE must be connected to the terminal which is marked with the letter N or coloured BLACK.
The wire which is coloured BROWN must be connected to the terminal which is marked with the letter L or coloured RED.
Making sure that neither core is connected to the earth terminal of the three pin plug.

• This applies only products distributed by Yamaha-Kemble music (U.K.) Ltd. (2 wires)

■ WARNING

Components having special characteristics are marked ⚠ and must be replaced with parts having specification equal to those originally installed.

■ SAVING DATA

Saving and backing up your data

Some data items are automatically saved as backup data in the internal memory even if you turn the power off.
Saved data may be lost due to malfunction or incorrect operation. Save important data to a USB storage device/or other external device such as a computer.

■ SPECIFICATIONS

Size/Weight	Dimensions	(W x D x H)	1,397 x 445 x 146 mm (55” x 17-1/2” x 5-3/4”) with keyboard stand: 1,399 x 445 x 761 mm (55-1/16” x 17-1/2” x 29-15/16”)
	Weight		22.5 kg (49 lbs. 10 oz.) with keyboard stand: 29.5 kg (65 lbs. 1 oz.)
Control Interface	Keyboard	Number of Keys	88
		Type	Graded Hammer Standard (GHS) Keyboard
		Touch Response	Soft, Medium, Hard, Fixed
	Other Controllers	Pitch Bend	Yes
	Display	Type	Full Dot LCD
		Size	320 x 240 dots
		Color	Monochrome
		Contrast	Yes
		Score Display Function	Yes
		Lyrics Display Function	Yes
		Language	English
	Panel	Language	English
Voices	Tone Generation	Piano Sound	Pure CF Sound Engine
		Damper Resonance	Yes
	Polyphony	Number of Polyphony (Max.)	128
	Preset	Number of Voices	147 + 15 Drum/SFX Kits + 381 XGlite
		Featured Voices	1 Natural! Voice, 9 Live! Voices, 8 Sweet! Voices, 7 Cool! Voices
	Compatibility		GM, XGlite
Effects	Types	Reverb	35 types
		Chorus	44 types
		DSP	237 types
		Master EQ	5 types
		Intelligent Acoustic Control (IAC)	Yes
	Functions	Dual	Yes
		Split	Yes
		Panel Sustain	Yes (Function Menu)
Accompaniment Styles	Preset	Number of Preset Styles	195
		Fingering	Multi Finger, Full Keyboard, AI Fingered
		Style Control	INTRO, MAIN x 2, FILL-IN, ENDING
	External Styles		Yes (SFF GE)
	Other Features	Music Database	305
		One Touch Setting (OTS)	Yes
		Style Recommender	Yes
		Smart Chord	Yes
Songs	Preset	Number of Preset Songs	100
	Recording	Number of Songs	5
		Number of Tracks	6 (5 Melody + 1 Chord)
		Data Capacity	Approx. 30,000 notes for 1 user song (when only “melody” tracks are recorded)
	Compatible Data Format	Playback	SMF (Format 0, Format 1), XF
		Recording	SMF (Format 0)
Audio Recorder	Length of Recording (max.)		80 minutes per single recording
	Compatible Data Format	Playback	.wav
		Recording	.wav
Functions	Registration	Number of Buttons	4 (x 8 banks)
	Lesson	Yamaha Education Suite (Y.E.S.)	Waiting, Your tempo, Minus one, Repeat & Learn, Chord Dictionary
	Demo	Demonstration	Yes
	Overall Controls	Metronome	Yes
		Tempo Range	5–280
		Transpose	-12 to 0, 0 to +12
		Tuning	Yes
	Miscellaneous	PIANO Button	Portable Grand Button
Storage and Connectivity	Storage	Internal Memory	Approx. 1.7MB
		External Drives	USB Flash Memory
	Connectivity	DC IN	DC IN 12V
		Headphones/Output	x 1
		Sustain Pedal	x 1
		Pedal Unit	x 1
		USB TO DEVICE	Yes
		USB TO HOST	Yes
		AUX IN (Stereo Mini)	Yes
Amplifiers and Speakers	Amplifiers		6W x 2
	Speakers		12cm x 2 + 5cm x 2
Power Supply	Power Supply		Adaptor (PA-150 or the equivalent)
	Power Consumption		13W
Accessories	Included Accessories		• Owner’s Manual • Data List • Keyboard Stand • Footswitch • Music Rest • AC Power Adaptor (PA-150 or an equivalent recommended by Yamaha) *1 • Online Member Product Registration *2 *1: May not be included depending on your particular locale. Check with your Yamaha dealer. *2: The PRODUCT ID on the sheet will be needed when you fill out the User Registration form.
	Optional Accessories (May not be available depending on your locale.)		• AC Power Adaptor: - Users within U.S.A. or Europe: PA-150 or an equivalent recommended by Yamaha - Others: PA-5D, PA-150 or an equivalent • Headphones: HPE-150 • Pedal Unit: LP-7A/7AWH • Footswitch: FC4/5 • USB MIDI Interface for iPhone/iPod touch/iPad: i-UX1

■ PANEL LAYOUT

Front Panel

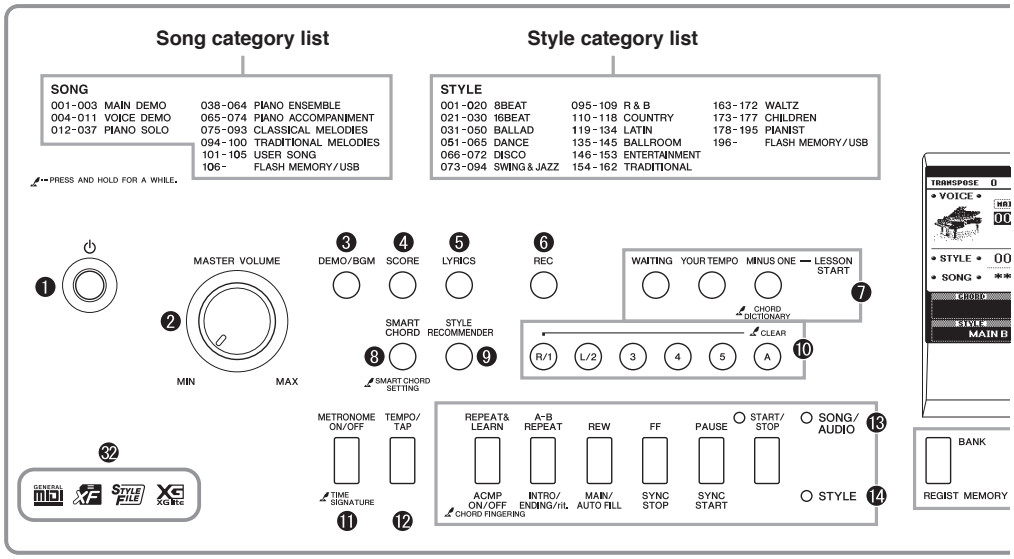

Front Panel

❶ [⏻] (Standby/On) switch
❷ [MASTER VOLUME] control
❸ [DEMO/BGM] button
❹ [SCORE] button
❺ [LYRICS] button
❻ [REC] button
❼ LESSON START
  [WAITING] button
  [YOUR TEMPO] button
  [MINUS ONE] button
❽ [SMART CHORD] button
❾ [STYLE RECOMMENDER] button
❿ Song Track
  [1]–[5], [A] buttons
  Lesson
  [R] and [L] buttons
⓫ [METRONOME ON/OFF] button
⓬ [TEMPO/TAP] button
⓭ SONG/AUDIO
  [REPEAT&LEARN] button
  [A-B REPEAT] button
  [REW] button
  [FF] button
  [PAUSE] button
  [START/STOP] button
⓮ STYLE
  [ACMP ON/OFF] button
  [INTRO/ENDING/rit.] button
  [MAIN/AUTO FILL] button
  [SYNC STOP] button
  [SYNC START] button
  [START/STOP] button
⓯ REGIST MEMORY
  [BANK], [1]–[4] buttons
⓰ CATEGORY [◀◀] and [▶▶] buttons
⓱ [EXIT] button
⓲ [EXECUTE] button
⓳ DATA ENTRY
  Dial, Number buttons [0]–[9],
  [+] and [–] buttons
⓴ [FILE CONTROL] button
㉑ [FUNCTION] button
㉒ [PORTABLE GRAND] button
㉓ [SONG/AUDIO] button
㉔ [STYLE] button
㉕ [VOICE] button
㉖ [MUSIC DATABASE] button
㉗ [SPLIT ON/OFF] button
㉘ [DUAL ON/OFF] button
㉙ [HARMONY ON/OFF] button
㉚ [PITCH BEND] wheel
㉛ [USB TO DEVICE] terminal
㉜ Compatible Formats

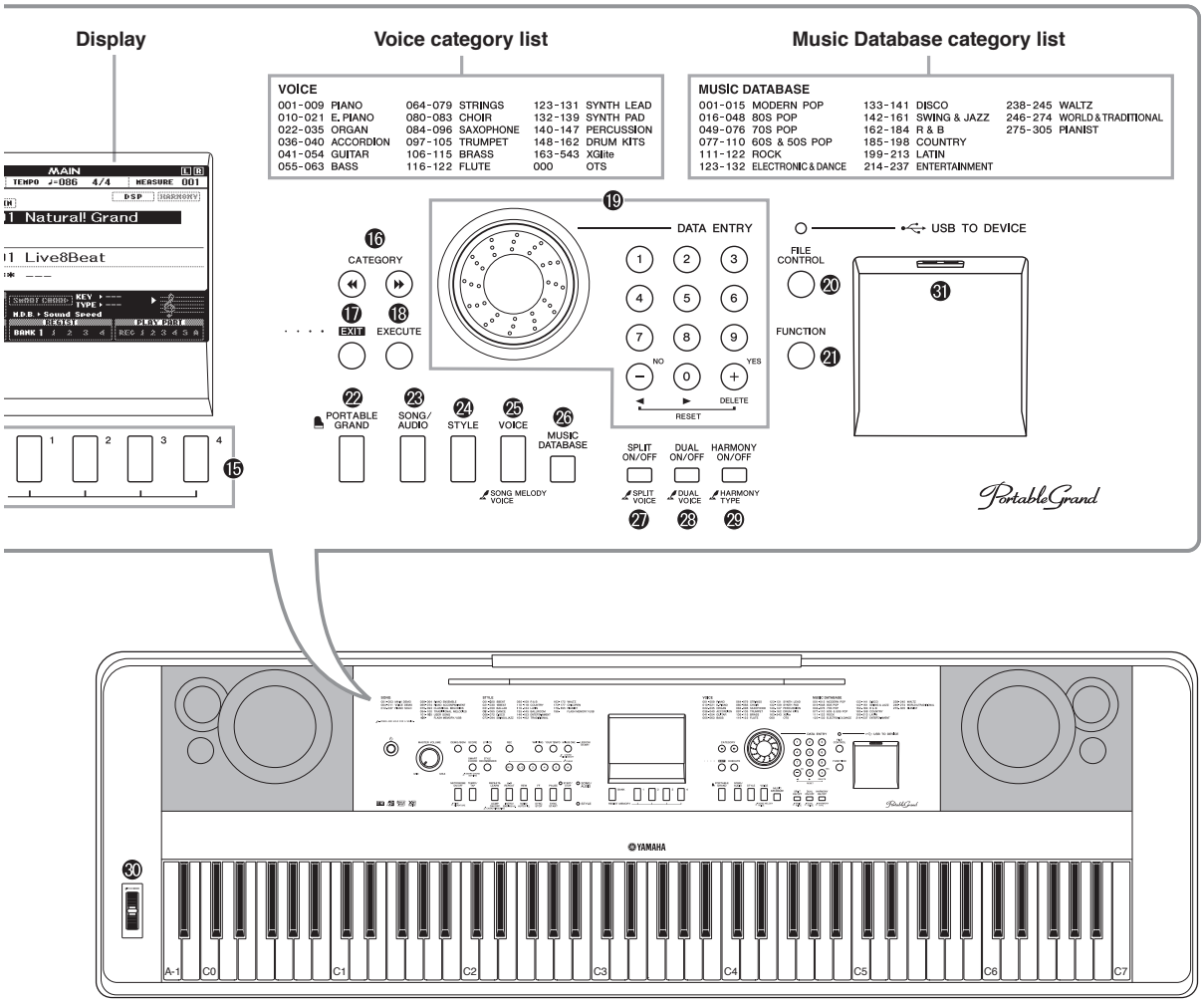

Rear Panel

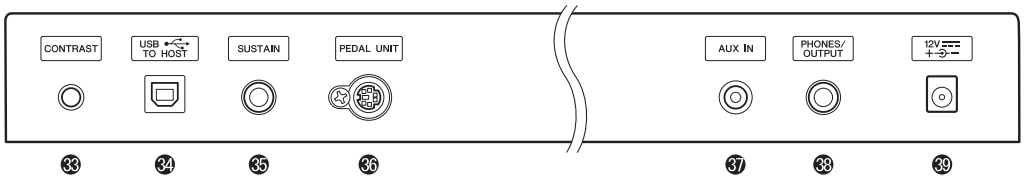

Rear Panel

- ㉝ [CONTRAST] knob
- ㉞ [USB TO HOST] terminal
- ㉟ [SUSTAIN] jack
- ㊱ [PEDAL UNIT] jack
- ㊲ [AUX IN] jack
- ㊳ [PHONES/OUTPUT] jack
- ㊴ DC IN jack

"Press & Hold" symbol

By holding down one of the buttons having this symbol, you can call up an alternate function, other than the one called up when simply pressing.

■ CIRCUIT BOARD LAYOUT&WIRING

• Upper case < Bottom view >

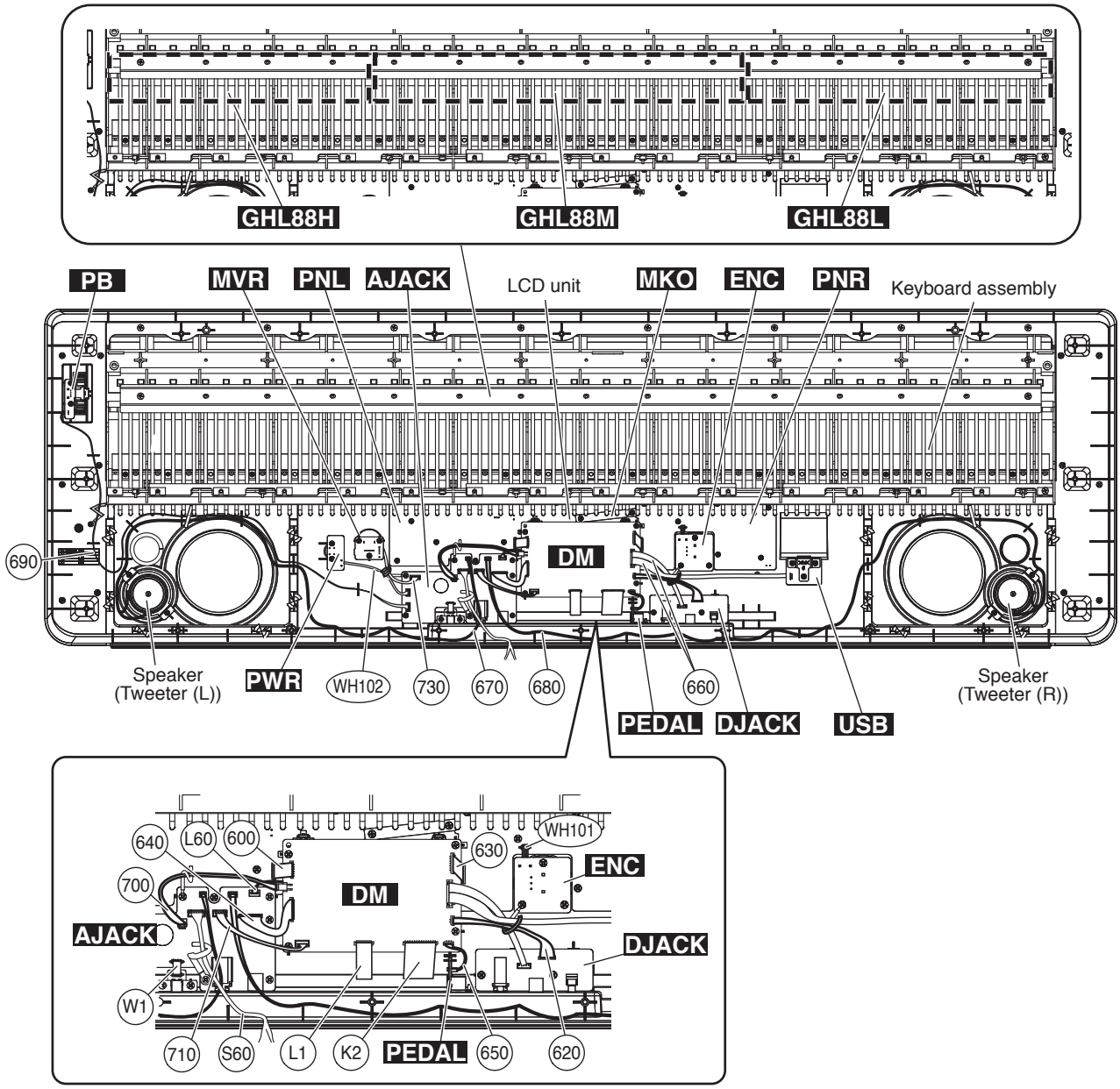

• Bottom board

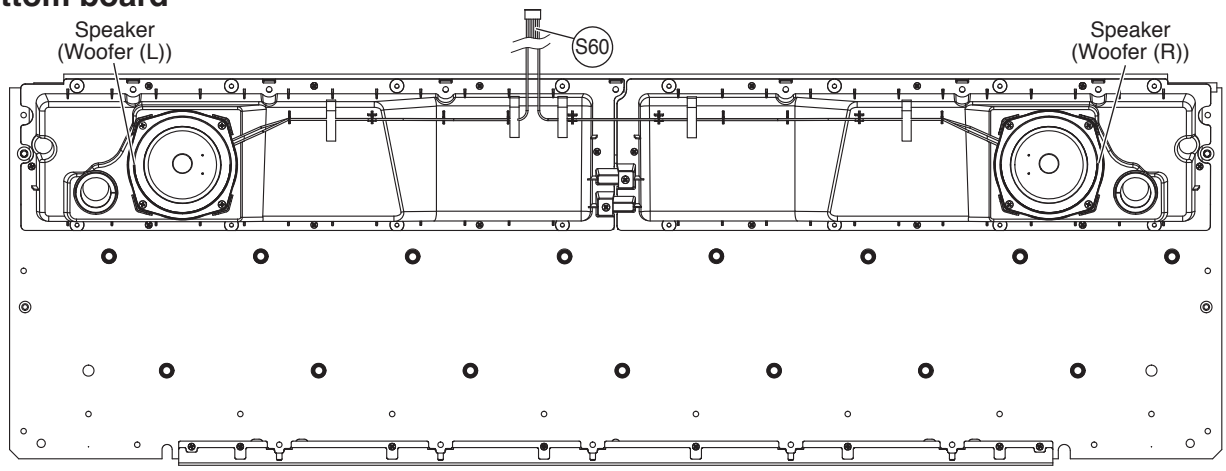

Location	Parts No.	Connector Assembly	Destination		Remarks
K2	MFA27350	FLEXIBLE FLAT CABLE	GHL88M-CN2	DM-CN001	Already connected to GHL88M
600	ZF629300	FLEXIBLE FLAT CABLE	DM-CN005	PNL-CN1	12P L=80mm
630	ZF629400	FLEXIBLE FLAT CABLE	DM-CN006	PNR-CN2	15P L=90mm
650	ZF508900	FLEXIBLE FLAT CABLE PDN	DM-CN007	PEDAL-CN701	6P L=90mm
640	ZF629600	FLEXIBLE FLAT CABLE	DM-CN008	AJACK-CN402	18P L=90mm
620	ZF509100	FLEXIBLE FLAT CABLE DJK	DM-CN009	DJACK-CN410	5P L=130mm
700	(ZF51010)*	CONNECTOR ASSEMBLY PWR	DM-CN013	AJACK-CN422	
710	(ZF51020)*	CONNECTOR ASSEMBLY SPB	DM-CN012	AJACK-CN415	
S60	(ZF51030)*	CONNECTOR ASSEMBLY SPA	AJACK-CN418	Woofer	
670	(ZF51040)*	CONNECTOR ASSEMBLY TWL	AJACK-CN419	Tweeter(L)	
680	(ZF51050)*	CONNECTOR ASSEMBLY TWR	AJACK-CN420	Tweeter(R)	
WH102	(ZF51060)*	WIRING ASSEMBLY SSW	AJACK-CN101	PWR-CN903	Already connected to PWR 2P L=150mm *1
730	(ZF51070)*	WIRING ASSEMBLY MVR	AJACK-CN403	MVR-CN902	4P L=95mm *1
W1	(ZF63380)*	WIRING ASSEMBLY DCC	AJACK-CN407	AJACK-CN408	Already connected to both. 4P L=45mm
690	(ZF51080)*	WIRING ASSEMBLY PTB	AJACK-CN103	PB-CN401	3P L=755mm *1
WH101	(ZF62920)*	WIRING ASSEMBLY ENC	PNR-CN3	ENC-CN901	Already connected to both. 3P L=70mm
660	(ZF86850)*	CONNECTOR ASSEMBLY USB	DM-CN10	DJACK-CN409	
				USB-CN411	
L60	(WB09210)*	WIRING ASSEMBLY BL	LCD ASSEMBLY-60	AJACK-CN423	*1
L1	WU967500	LCD UNIT	LCD ASSEMBLY-10	DM-CN002	FFC cable has installed to LCD unit.

The parts with "( )" in "Part No." are not available as spare parts.

*1 Edge mark is adjusted to Pin 1 mark (△ mark).

■ BLOCK DIAGRAM

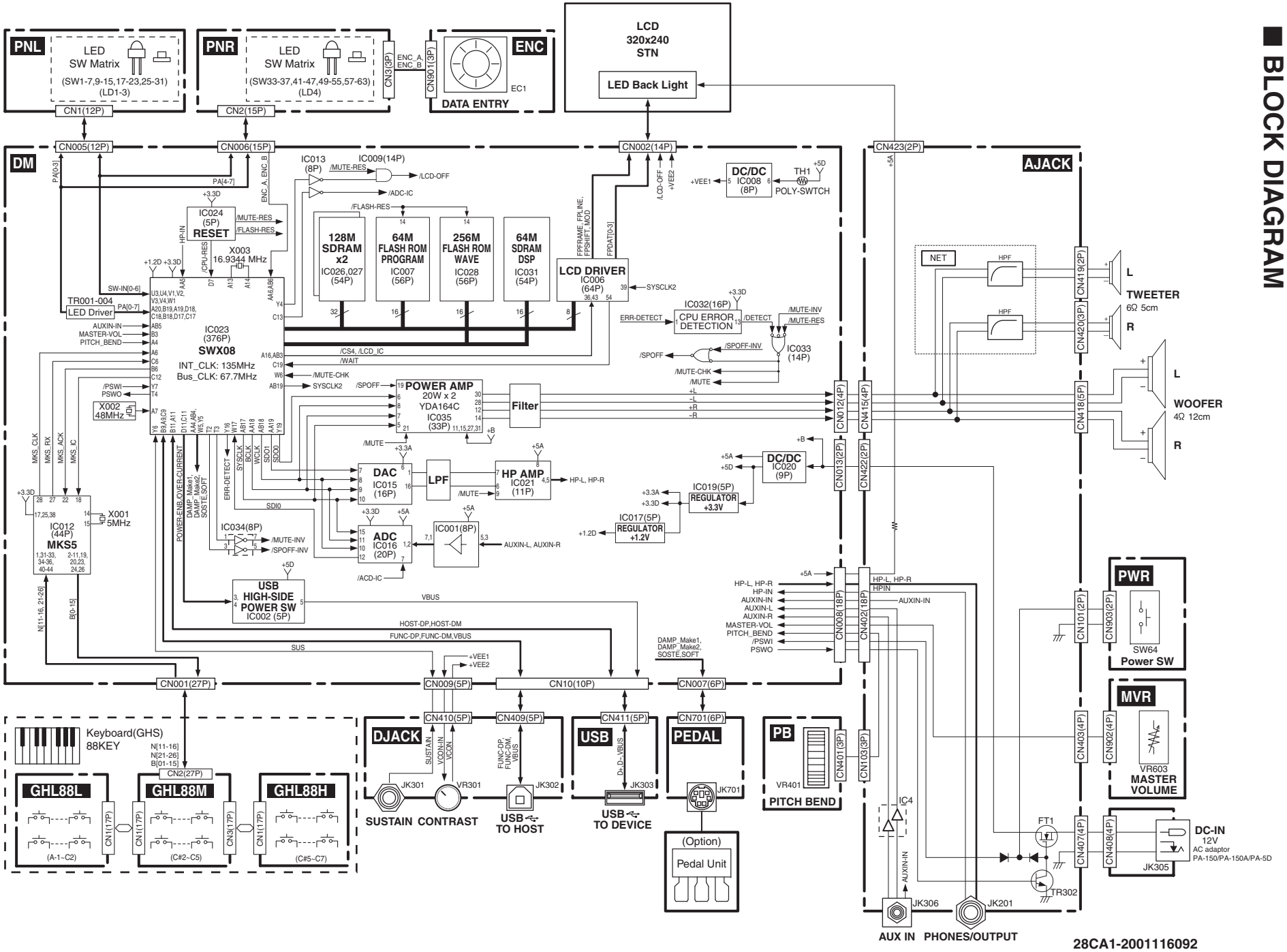

28CA1-2001116092

■ DISASSEMBLY PROCEDURE

CAUTION:

1) Flat cable's contacts are visible from the back. Pay attention not to insert and install the cable to the connector inversely.

2) Be surto attach the removed filament tape just as it was before removal.

Front Side (Printed Side)

Back side

1. Bottom Board Assembly (Time required: About 8 minutes)

1-1 Remove the five (5) screws marked [940A]. The lower case F can then be removed. (Fig.1)

1-2 Remove the four (4) screws marked [940B] and the guide screw marked [950A]. The lower case L can then be removed. (Fig.1)

1-3 Remove the four (4) screws marked [940C] and the guide screw marked [950B]. The lower case R can then be removed. (Fig.1)

1-4 Remove the thirty (30) screws marked [940D]. The bottom board assembly can then be separated from the upper case assembly. (Fig.1)

* *When the lower case L is assembled, tighten the screws marked [940B] in the order of 1, 2, 3 and 4. (Fig.1)*

* *When the lower case R is assembled, tighten the screws marked [940C] in the order of 1, 2, 3 and 4. (Fig.1)*

< Bottom view >

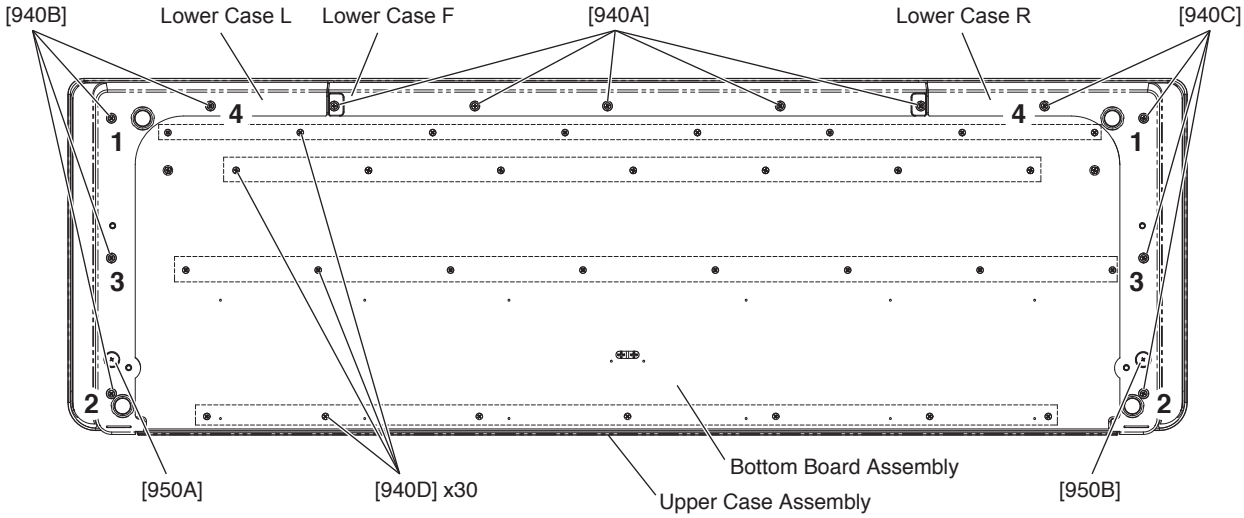

1 - 4 : The order of the screw tightening

Fig.1

2. Circuit Boards and Assemblies (Upper Case Part) (Time required: About 9 minutes)

2-1 Separate the upper case assembly from the bottom board assembly. (See procedure 1.)

2-2 After removing the upper case assembly, remove the following screws. Each circuit board and assembly can then be removed. (Fig.2)(Table 1)

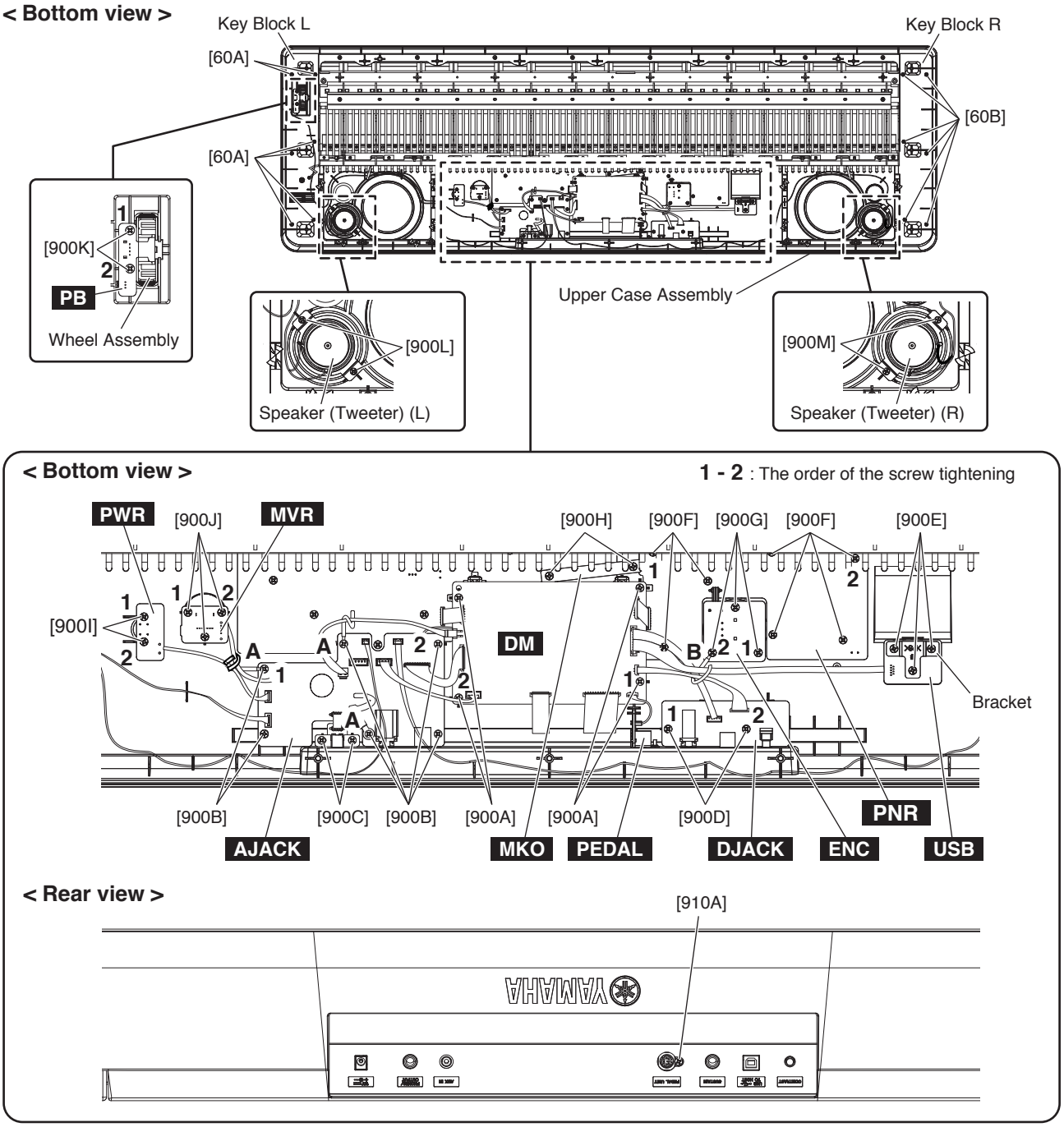

Fig.2

Circuit Board and Assembly	Screw Ref.No. / Part Name	QTY	Fig.
DM Circuit Board	900A (*1)	4	2
AJACK Circuit Board	900B (*1) (*2)	6	2
	900C	2	2
DJACK Circuit Board	900D (*1)	2	2
USB Circuit Board	900E (*4)	3	2
PNR Circuit Board & (*3)	900F (*1)	7	2
ENC Circuit Board	900G (*1) (*6)	3	2
	Encoder Knob (*8)	1	2-3
MKO Circuit Board (*5)	900H	2	2
PWR Circuit Board	900I (*1)	2	2
	Push Knob (*7)	1	2-2
MVR Circuit Board	900J (*1)	3	2
	Volume Knob (*9)	1	2-4
PB Circuit Board Wheel Assembly	900K (*1)	2	2
Speaker (Tweeter) (L)	900L	2	2
Speaker (Tweeter) (R)	900M	2	2
PEDAL Circuit Board	910A	1	2
Key Block L	60A	6	2
Key Block R	60B	6	2

*1 When assembling it, tighten the screw marked 1, 2 and other screws in this order. (Fig.2)
*2 As for the screw at the location of A, it is thghtened together with a cord holder. (Fig.2)
*3 The PNR and the ENC circuit boards are connected with a board-in connector. (Fig.2)
*4 As for the three (3) screws, they are tightened together with a bracket. (Fig.2)
*5 The MKO circuit board is used as a flat cable holder. (Fig.2)
*6 As for the screw at the location of B, it is thghtened together with a cord holder. (Fig.2)
*7 Push Knob (See Fig.2-2.)
*8 Encoder Knob (See Fig.2-3.)
*9 Volume Knob (See Fig.2-4.)

Table 1

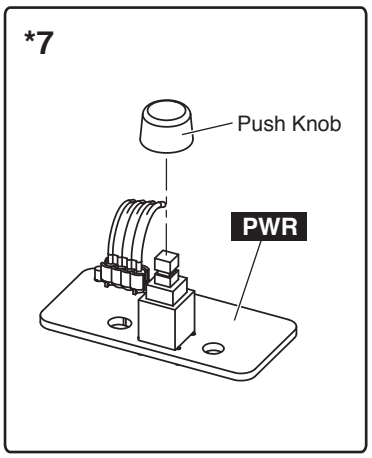

Fig.2-2

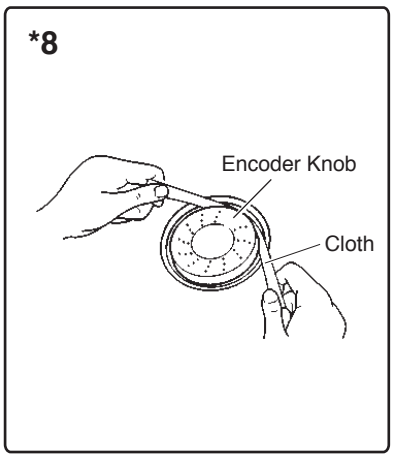

Fig.2-3

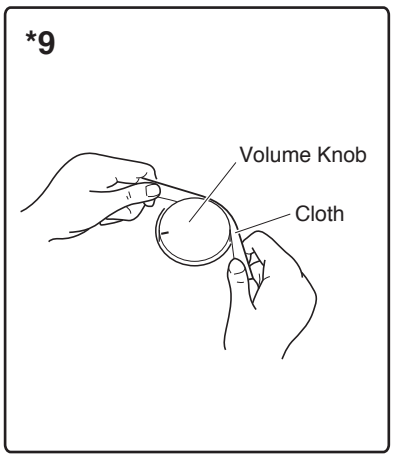

Fig.2-4

3. LCD Assembly (Time required: About 10 minutes)

3-1 Separate the upper case assembly from the bottom board assembly. (See procedure 1.)

3-2 Remove the DM circuit board. (See procedure 2.)

3-3 Remove the four (4) screws marked [900N]. The LCD assembly can then be removed. (Fig.3)

* ***When the LCD assembly is assembled, tighten the screws marked [900N] in the order of 1, 2 at the condition that pushed it to the keyboard side. (Fig.3)***

4. PNL Circuit Board (Time required: About 10 minutes)

4-1 Separate the upper case assembly from the bottom board assembly. (See procedure 1.)

4-2 Remove the MKO circuit board. (See procedure 2.)

4-3 Separate the GHL keyboard assembly from the upper case assembly. (See procedure 6.)

4-4 Remove the twelve (12) screws marked [900O]. The PNL circuit board can then be removed. (Fig.4)

* ***When the PNL circuit board is assembled, tighten the screws marked [900O] in the order of 1, 2 and the remaining screws. (Fig.4)***

< Bottom view >

1 - 2 : The order of the screw tightening

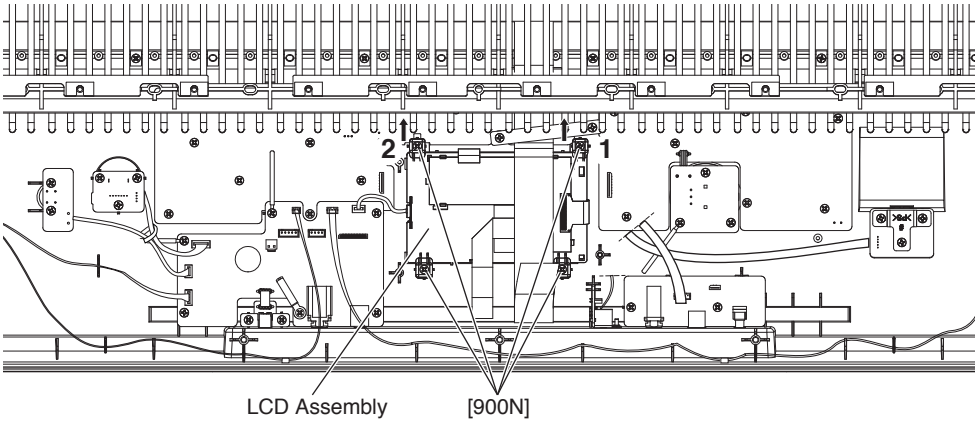

Fig.3

< Bottom view >

1 - 2 : The order of the screw tightening

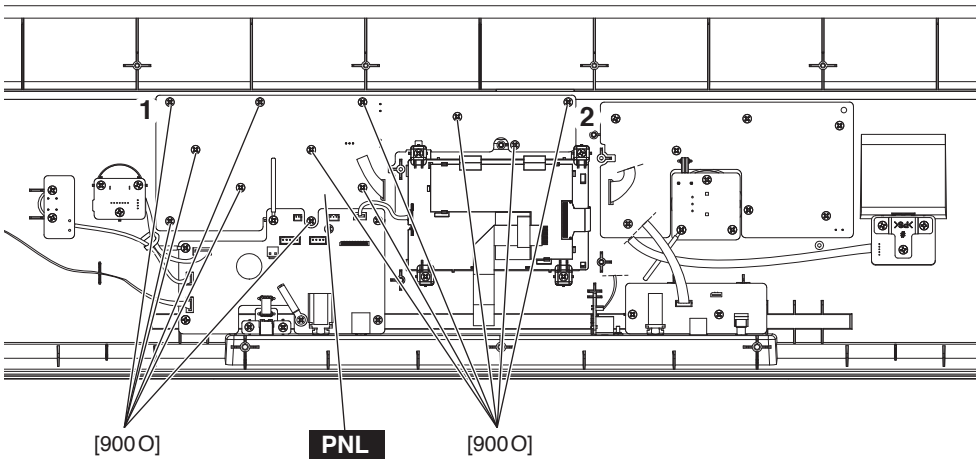

Fig.4

5. Speaker (Woofer) (Time required: About 8 minutes)

5-1 Separate the bottom board assembly from the upper case assembly. (See procedure 1.)

5-2 Remove the four (4) screws marked [100]. The speaker (woofer) can then be removed. (Fig.5)

* ***The woofers L and R can be removed in the same manner.***

6. GHL Keyboard Assembly (Time required: About 12 minutes)

6-1 Separate the upper case assembly from the bottom board assembly. (See procedure 1.)

6-2 Remove the MKO circuit board (holder). (See procedure 2.)

6-3 Remove the eight (8) screws marked [930A] and the eight (8) screws marked [920]. The GHL keyboard assembly can then be removed from the upper case assembly. (Fig.6)

6-4 When the GHL keyboard assembly is exchanged (not only removing), remove the two (2) screws marked [930B]. The reinforcing plate can then be removed from the GHL keyboard assembly. (Fig.6)

* ***When the reinforcing plate is assembled, tighten the screws marked [930B] in the order of 1 and 2. (Fig.6)***

* ***When the GHL keyboard assembly is assembled, tighten the screws marked [930A] in the order of 1, 2, 3 and the remaining screws. (Fig.6)***

< Top view >

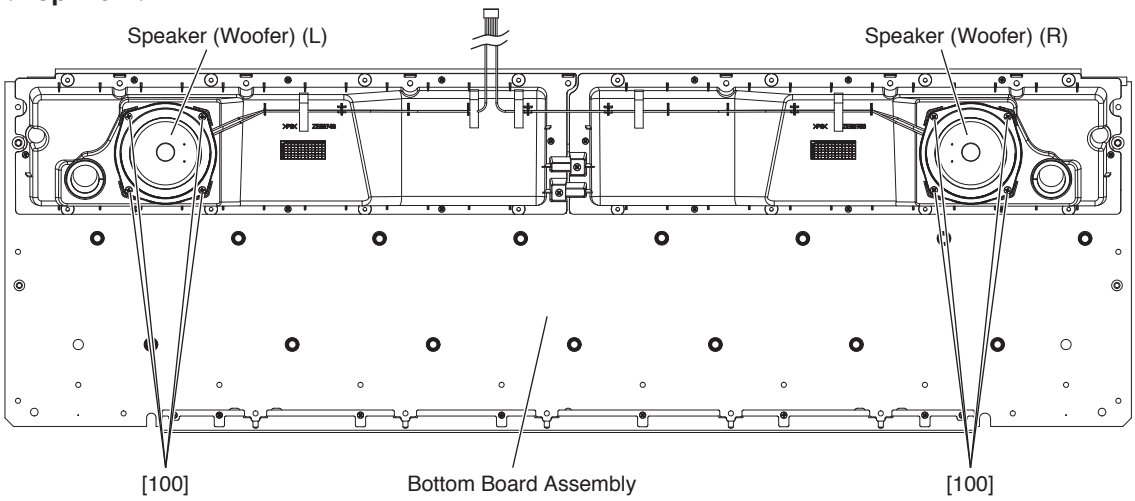

Fig.5

< Bottom view >

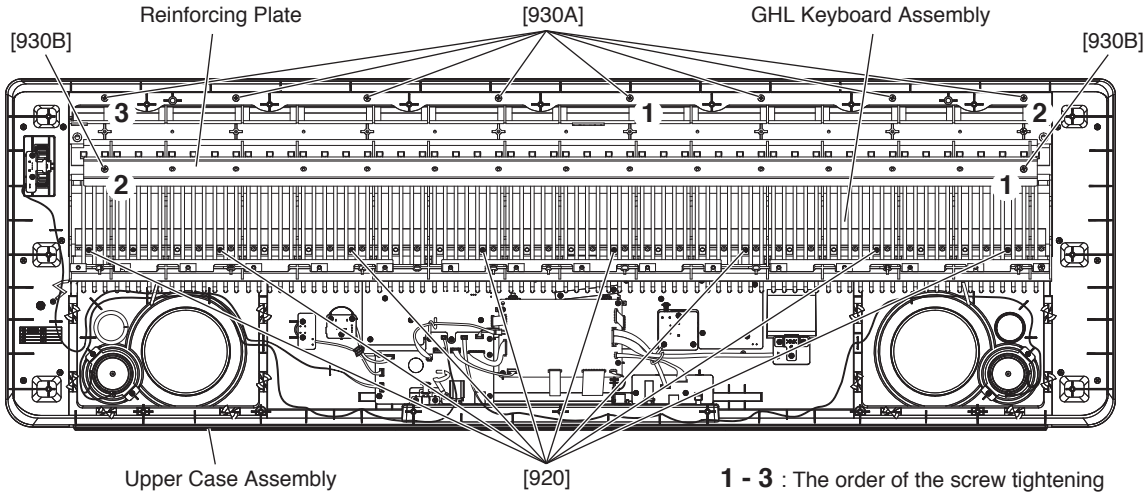

Fig.6

7. Disassembling the Keyboard Assembly

7-1 White key assembly and black key assembly

Remove the four (4) screws marked [270A] fixing a black key assembly and two (2) white key assemblies for one octave (C-B).

To remove the black and white key assemblies for one octave, grip and lift the both end lugs of white key, and then slide the black and white key assemblies toward you. (Fig.7, Fig.8)

7-2 When removing white keys numbered as A-1 and B-1 key and black key numbered as A#-1, remove two (2) screws marked [270B] and then lift the back of the keys and slide the black and white keys towards you. (Fig.7)

7-3 When removing the C7 key, remove a screw marked [270C] and then lift the back of C7 key and slide it towards you. (Fig.7)

* ***When removing white key assembly and black key assembly, be careful not to allow grease to attach to the circuit board and rubber contacts, etc. (Fig.8)***

< Top View >

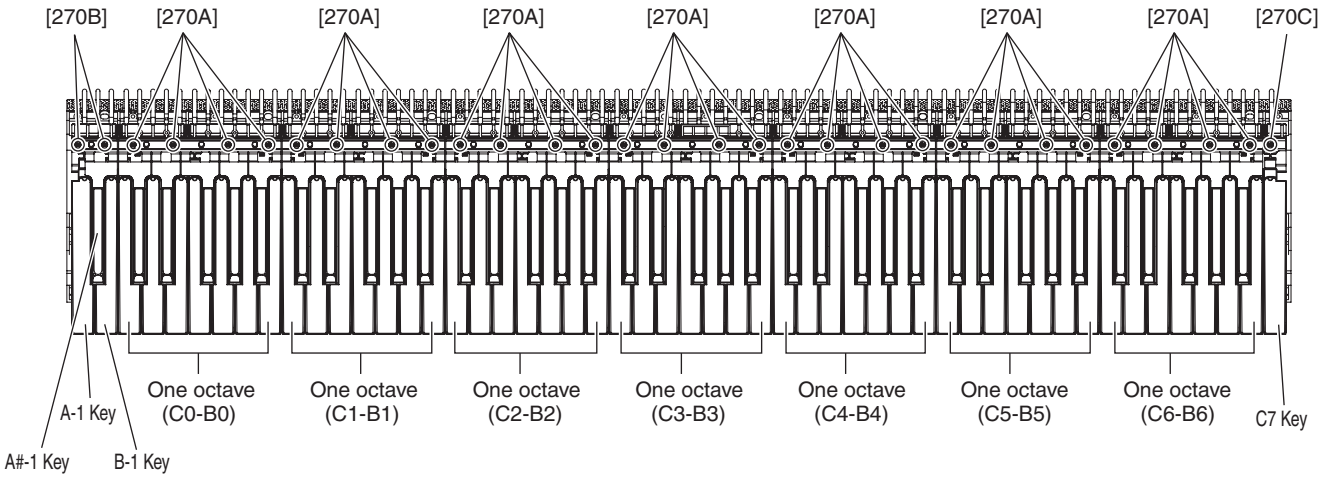

Fig.7

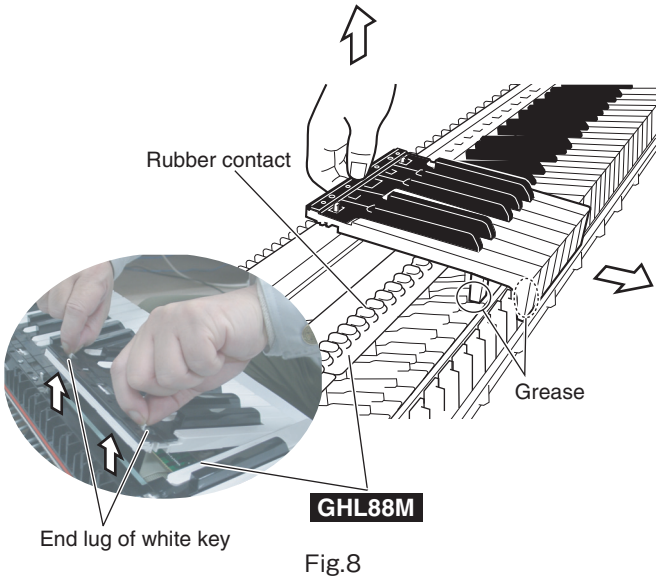

Fig.8

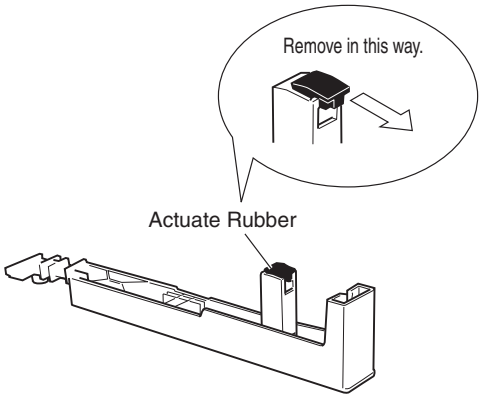

Fig.9

< Top View >

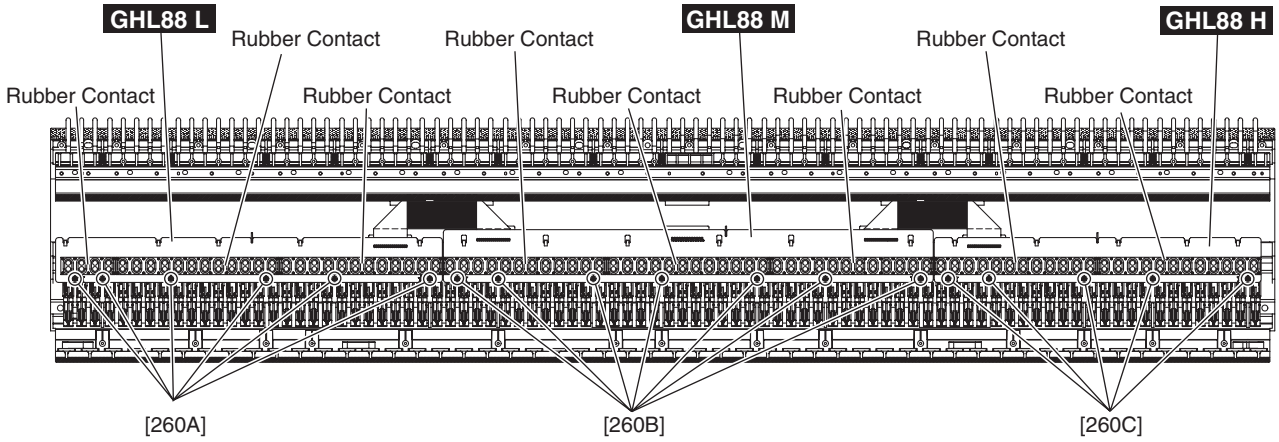

Fig.10

7-4 Actuate Rubber

Remove the actuate rubber. (Fig.9)

7-5 Rubber Contact

Remove the black and white key assembly for two octaves related to the subject rubber contact.The rubber contact can then be removed. (Fig.10, Fig.11)

Notes: Note that the rubber contact has a specific installation direction.

One rubber contact fits for C#-C (for C-B keys).

7-6 GHL88L Circuit Board

Remove the black and white key assembly (A-1-B2). (See procedure 7-1.)

Remove the six (6) screws marked [260A]. The GHL88L circuit board can then be removed. (Fig.10)

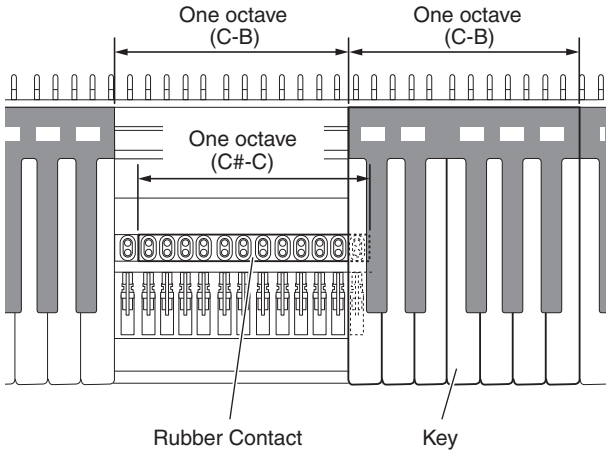

To remove the rubber contact for one octave, keys for 2 octaves need to be removed.

Fig.11

< Top View>

< Side View >

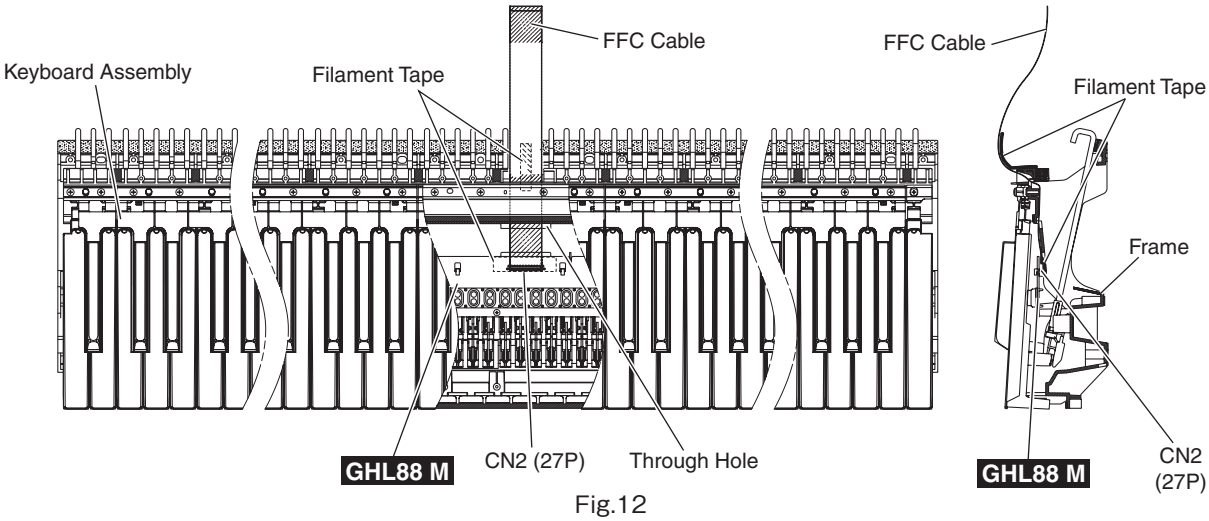

Fig.12

7-7 GHL88M Circuit Board

Remove the black and white key assembly (C2-B5). (See procedure 7-1.)
Remove the seven (7) screws marked [260B]. The GHL88M circuit board can then be removed. (Fig.10)
Detach the filament tape and disconnect the FFC cable. (Fig.12)

7-8 GHL88H Circuit Board

Remove the black and white key assembly (C5-C7). (See procedure 7-1.)
Remove the five (5) screws marked [260C]. The GHL88H circuit board can then be removed. (Fig.10)

7-9 Hammer (White Key), (Black Key)

Remove the black and white key assembly for the related keys.
With the key frame placed upside down, push the hammer forward from the rear, then a click sound is heard and the hammer bearing section can be removed from the hammer axis of the key frame.
Take out the hammer sideways. (Fig.13, Fig.14)

Note: ***When removing the hammer, use care not to cause damage to the hammer bearing and its claw.***

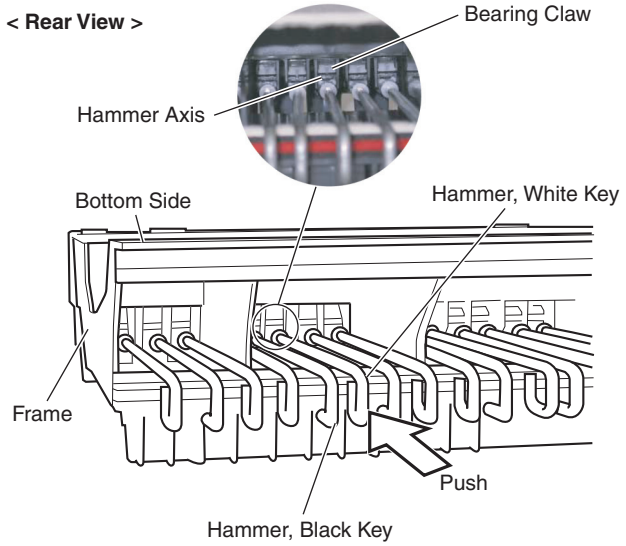

Fig.13

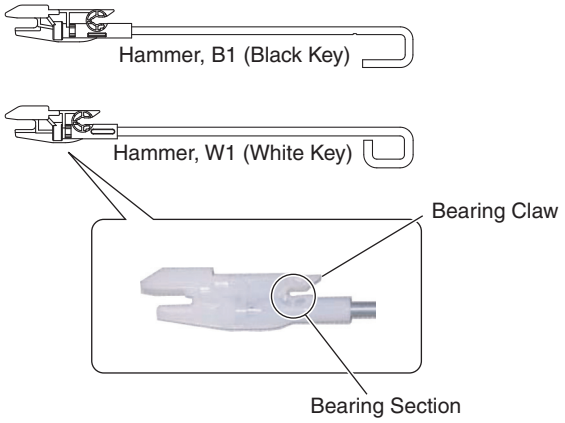

Fig.14

8. Assembling the Keyboard Assembly

8-1 Hammer (White Key), (Black Key)

After applying grease(G-1030Y) to the bearing section of the hammer, bring the hammer (white key)(black key) sideways from the rear, fit its bearing section to the hammer axis of the key frame and pull it forward until a click sound is heard. (Fig.15)

Note: ***There are 8 hammer types differing in weight. Be sure to check the type of the hammer for correct installation. (See Table 2)***

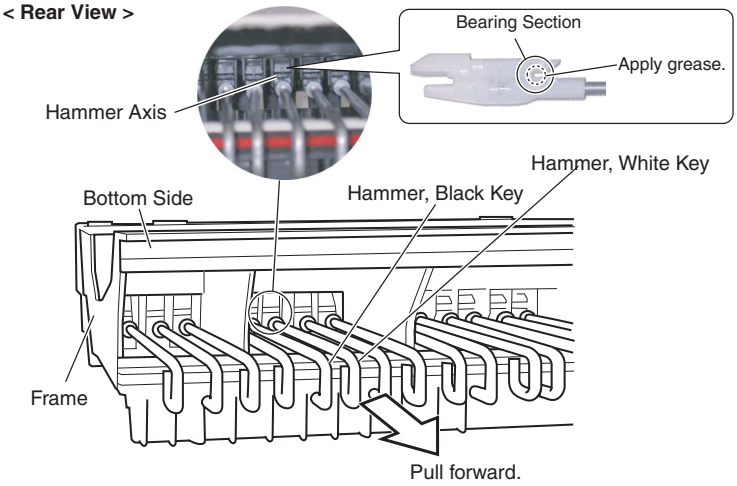

Fig.15

8-2 GHL88L Circuit Board

Tighten the six (6) screws marked [260A] to fix the GHL88L circuit boards. (Fig.10)

8-3 GHL88M Circuit Board

Connect the FFC cable to CN2 of the GHL88M circuit board, attach the filament tape. (Fig.12)
Pass the end of the cable into the through hole in the frame and pull it out from its outlet. (Fig.12)
Tighten the seven (7) screws marked [260B] to fix the GHL88M circuit board. (Fig.10)

Part Name		Range for Applicable Tone Keys
White Key	Hammer W1	A-1 – F1
	Hammer W2	G1 – E3
	Hammer W3	F3 – D5
	Hammer W4	E5 – C7
Black Key	Hammer B1	A#-1 – F#1
	Hammer B2	G#1 – D#3
	Hammer B3	F#3 – C#5
	Hammer B4	D#5 – A#6

Table.2

* ***Method of processing FFC cable***
Pull the FFC cable not to touch to the key hammers by loosening of the cable under the circuit board, and fix the cable with the filament tape in such a state. (Photo1, Photo2) Then, wrap the cushion around the FFC cable.(Photo3) After you wrap the cushion around the FFC cable, do not put the filament tape directly to the cushion because it is too easy to peel it off. Therefore, put the filament tape directly to the FFC cable, not to the cushion. (Photo 4)

Photo.1

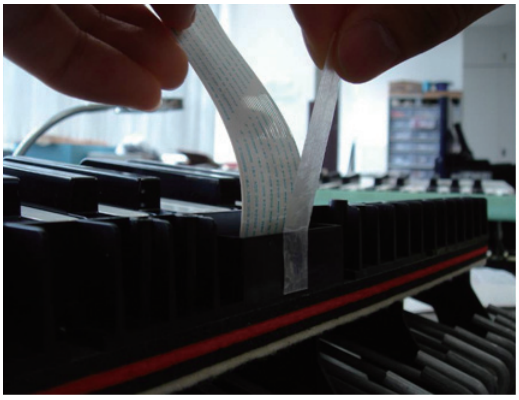

Photo.2

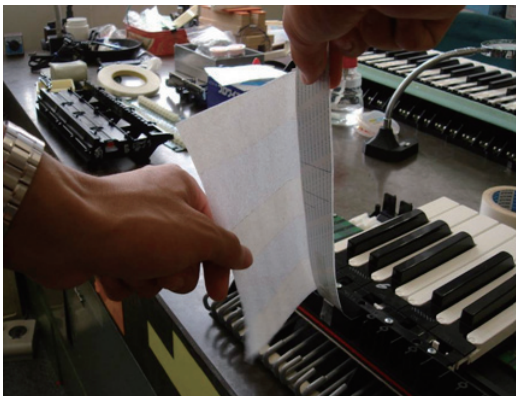

Photo.3

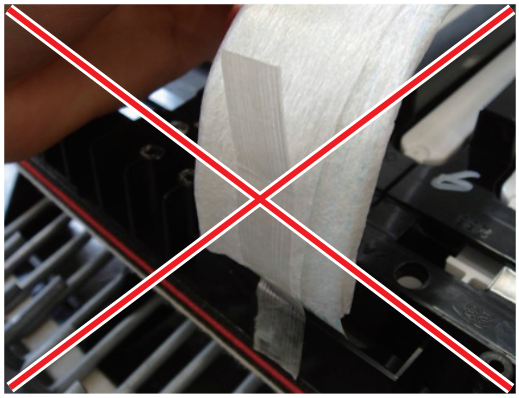

Photo.4

8-4 GHL88H Circuit Board

Tighten the five (5) screws marked [260C] to fix the GHL88H circuit board. (Fig.10)

8-5 Rubber Contact

Note that the rubber contact has s specific installation direction. Be careful not to install it in the wrong direction.

Note: ***A triangle mark (△) on the rubber contact must face the front. (Fig.16)***

To prevent looseness of the rubber contact, fit it securely in place using a clip or similar object. (Fig.17)

8-6 Actuate Rubber

After applying grease(G-1030Y) to top and bottom faces of the actuate rubber, fit it to the white key (black key). (Fig.18)

8-7 White key assembly and black key assembly

After applying grease to the key guide, install the white key assembly/black key assembly.
At this time, check to make sure that the key guide of the key frame and inside slit at the front of white key as well as the contact arm of the hammer and actuate rubber of the white key assembly/black key assembly are installed properly. (Fig.19)
Use the four (4) screws marked [270A] to fix 1 octave white key assembly/black key assembly. (Fig.7)

8-8 Use the two (2) screws marked [270B] to fix the A-1 to B-1 keys. (Fig.7)

8-9 Use a screw marked [270C] to fix the C7 key. (Fig.7)

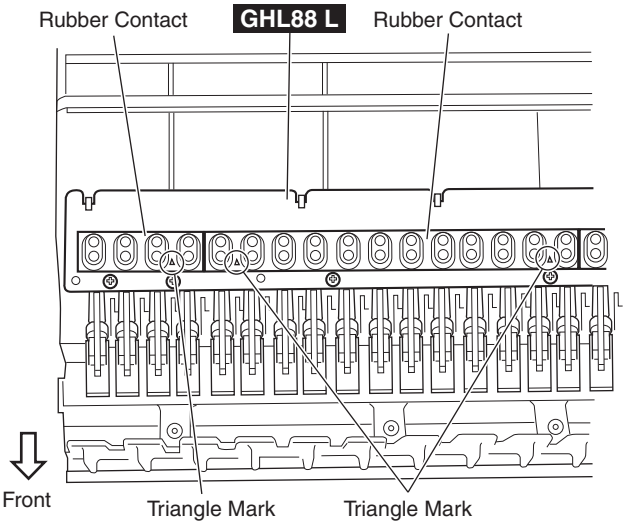

Fig.16

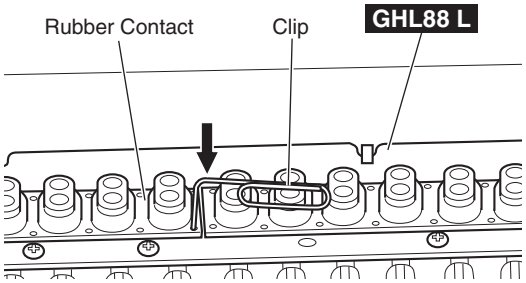

Fig.17

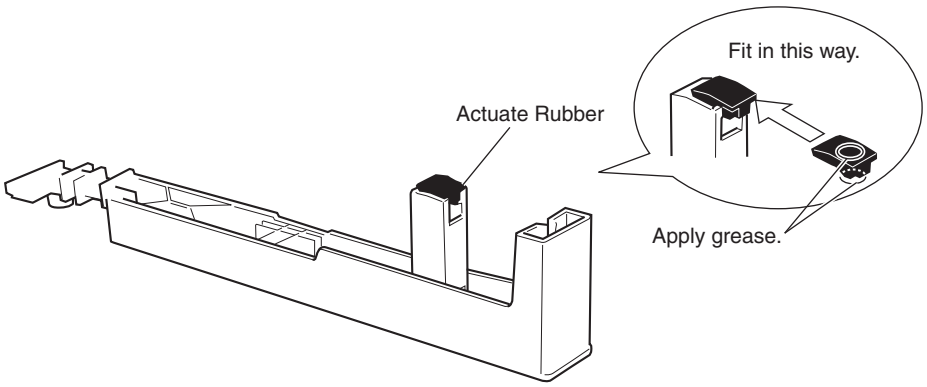

Fig.18

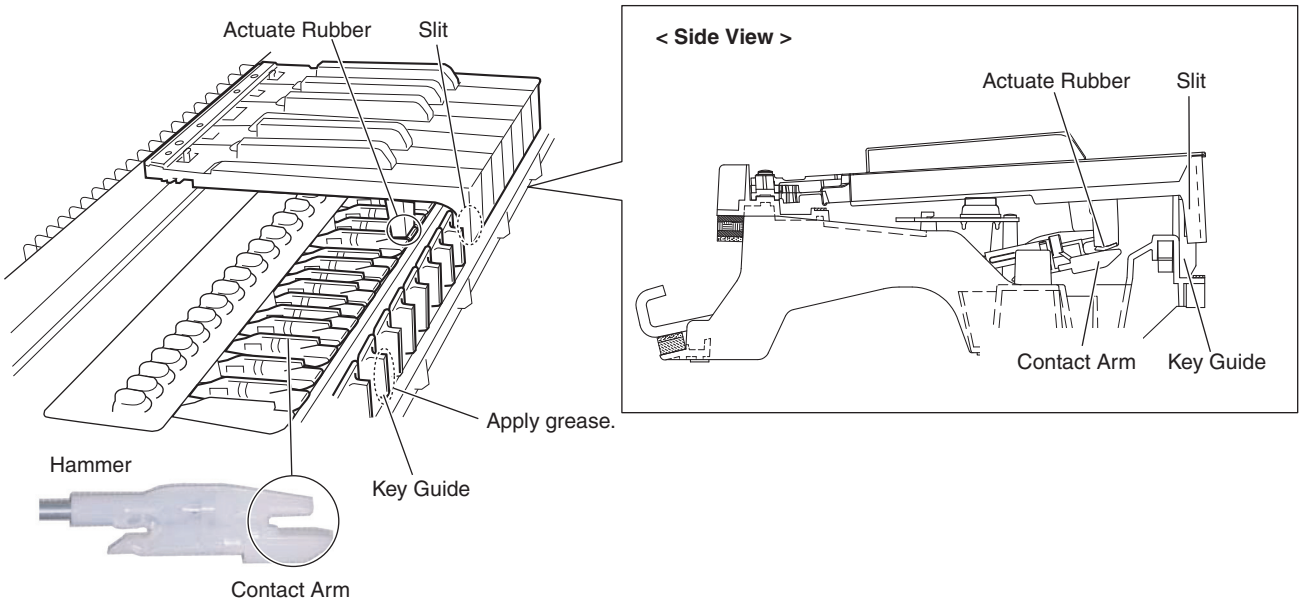
Actuate Rubber
Slit
< Side View >
Actuate Rubber
Slit
Contact Arm
Key Guide
Apply grease.
Hammer
Key Guide
Contact Arm

Fig.19

■ LSI PIN DESCRIPTION

CONTENTS

● YDA164C-QZE2 (YD652A00) AMP (POWER AMPLIFIER 20Wx2)

DM: IC035

PIN NO.	NAME	I/O	FUNCTION	PIN NO.	NAME	I/O	FUNCTION
1	AVSS	GND	Analog GND	17	HOPP	I	PWM Carrier Frequency Hopping setting pin
2	VREF	AO	Analog Reference Voltage Output	18	PLIMIT	I	Power Limit setting pin
3	REFA	AO	Internal Regulator Output	19	SLEEPN	I	Sleep Reset pin
4	DVDD	DVDD power	Digital Power	20	PROTN	O/D	Error Flag Output pin
5	MCK	I	Master Clock Input Pin	21	MUTEN	I	Mute pin
6	SDATA	I	Audio Data Input Pin	22	CKMOD	I	Clock Mode setting pin
7	SCLK	I	Bit Clock Input Pin	23	GAIN0	I	Gain setting pin 0
8	LRCLK	I	Word Clock Input Pin	24	GAIN1	I	Gain setting pin 1
9	DVSS	GND	Digital GND	25	MONO	I	Stereo/Mono setting pin
10	PVSSR	GND	GND for the digital amplifier output (Rch)	26	PVSSL	GND	GND for the digital amplifier output (Lch)
11	PVDDPR	PVDD power	Power for the digital amplifier output (Rch+)	27	PVDDML	PVDD power	Power for the digital amplifier output (Lch-)
12	OUTPR	O	Digital Amplifier Output (Rch+)	28	OUTML	O	Digital Amplifier Output (Lch-)
13	PVSSR	GND	GND for the digital amplifier output (Rch)	29	PVSSL	GND	GND for the digital amplifier output (Lch)
14	OUTMR	O	Digital Amplifier Output (Rch-)	30	OUTPL	O	Digital Amplifier Output (Lch+)
15	PVDDMR	PVDD power	Power for the digital amplifier output (Rch-)	31	PVDDPL	PVDD power	Power for the digital amplifier output (Lch+)
16	PVSSR	GND	GND for the digital amplifier output (Rch)	32	PVSSL	GND	GND for the digital amplifier output (Lch)

• μPD789022GB-A15-8E (XZ56010R) CPU(MKS)

DM: IC012

PIN NO.	NAME	I/O	FUNCTION	PIN NO.	NAME	I/O	FUNCTION
1	P12	I/O	Port 1	23	P32/INTP2/CPT2	I/O	Port 3/External interrupt input/Capture edge input
2	P11	I/O		24	P31/INTP1	I/O	Port 3/External interrupt input
3	P10	I/O		25	P30/INTP0	I/O	
4	P47/KR7	I/O	Port 4/Key return signal detection input	26	P22/RXD/SI0	I/O	Port 2/Asynchronous serial interface serial data input/Serial interface serial data input
5	P46/KR6	I/O		27	P21/TXD/SO0	I/O	Port 2/Asynchronous serial interface serial data output/Serial interface serial data output
6	P45/KR5	I/O		28	P20/ASCK//SCK0	I/O	Port 2/Asynchronous serial interface serial clock input/Serial interface serial clock
7	P44/KR4	I/O		29	P07	I/O	Port 0
8	P43/KR3	I/O		30	P06	I/O	
9	P42/KR2	I/O		31	P05	I/O	
10	P41/KR1	I/O		32	P04	I/O	
11	P40/KR0	I/O		33	P03	I/O	
12	NC			34	P02	I/O	
13	IC		Internally connected (N.C.)	35	P01	I/O	
14	X2		Clock	36	P00	I/O	
15	X1	I		37	NC		
16	VSS0		Ground	38	VDD1		Power supply
17	VDD0		Power supply	39	VSS1		Ground
18	/RESET	I	System reset	40	P17	I/O	Port 1
19	P53	I/O	Port 5	41	P16	I/O	
20	P52	I/O		42	P15	I/O	
21	P51/TO2	I/O	Port 5/16-bit timer output	43	P14	I/O	
22	P50/TI0/TO0	I/O	Port 5/External count clock input to 8-bit timer/8-bit timer output	44	P13	I/O	

• S1D13700F01A100 (X5422A00) LCD CONTROLLER

DM: IC006

PIN NO.	NAME	I/O	FUNCTION	PIN NO.	NAME	I/O	FUNCTION
1	VSS	–	Ground	33	VSS	–	Ground
2	AB12	I	Adorress bus	34	XCD1	O	Drain output
3	AB11	I		35	XCG1	I	Gate input
4	AB10	I		36	RESET#	I	Reset
5	AB9	I		37	SCANEN	I	Test mode set up input
6	AB8	I		38	TESTEN	I	
7	HIOVDD	–	Power supply	39	CLKI	I	Externally sourced system clock
8	AB7	I	Adorress bus	40	COREVDD	–	Power supply
9	AB6	I		41	RD#	I	Read strobe
10	AB5	I		42	WR#	I	Write strobe
11	AB4	I		43	CS#	I	Chip select
12	COREVDD	–	Power supply	44	DB7	I/O	Data bus
13	AB3	I	Adorress bus	45	DB6	I/O	
14	AB2	I		46	DB5	I/O	
15	AB1	I		47	DB4	I/O	
16	AB0	I		48	HIOVDD	–	Power supply
17	VSS	–	Ground	49	DB3	I/O	Data bus
18	FPDAT3	O	Data bus	50	DB2	I/O	
19	FPDAT2	O		51	DB1	I/O	
20	FPDAT1	O		52	DB0	I/O	
21	FPDAT0	O		53	VSS	–	Ground
22	NIOVDD	–	Power supply	54	WAIT#	O	Wait output
23	FPSHIFT	O	Shift clock	55	HIOVDD	–	Power supply
24	XECL	O	X driver enable chain clock	56	CNF0	I	Input pin for S1D 13700 setting
25	COREVDD	–	Power supply	57	CNF1	I	
26	FPLINE	O	Latch pulse	58	CNF2	I	
27	MOD	O	Frame signal	59	CNF3	I	
28	VSS	–	Ground	60	CNF4	I	
29	YSCL	O	Scan shift clock	61	AS#	I	Address strobe
30	FPFRAME	O	Scan start pluse	62	AB15	I	Address bus
31	YDIS	O	LCD power-down output	63	AB14	I	
32	NIOVDD	–	Power supply	64	AB13	I	

● R8A02042BG (YC479A00) SWX08

DM: IC023

PIN NO.	NAME	I/O	FUNCTION
A1	VSS	-	Ground (for I/O and for core)
A2	VSSADC	-	ADC analog ground
A3	VCCADC	-	ADC analog power supply (Typ +3.3V)
A4	AN4	I(a)	ADC analog input 4
A5	VREFADC	-	Analog module reference voltage. (Typ +3.3V)
A6	SCK1	Ish/O	External synchronous clock I/O 1
A7	UCLK	I	USB external clock input (48MHz)
A8	VSS	-	Ground (for I/O and for core)
A9	FUNC_DM	I/O(a)	USB function data -
A10	VSS	-	Ground (for I/O and for core)
A11	HOST_DM	I/O(a)	USB host data - (After hard reset is released, it becomes Low output status.)
A12	UCTL	I	USB output control (Make it to High when USB unused).
A13	XTAL	O	Crystal oscillator output
A14	EXTAL	I	Crystal oscillator input (16.9344MHz)
A15	VSS	-	Ground (for I/O and for core)
A16	CS4N/PH4	O	SH2A-CPU chip selection 4 (Low active)/port PH 4
A17	TRSTN	Ish	JTAG test reset input (Low active)
A18	TDO	O	JTAG test data output
A19	PA2	I/O	Parallel port A 2
A20	PA0	I/O	Parallel port A 0
A21	IRQ1	Ish	Interrupt input 1
A22	VCCQ	-	The power supply +3.3V
B1	MA1	O	Wave ROM, SDRAM address bus 1
B2	VSS	-	Ground (for I/O and for core)
B3	AN5	I(a)	ADC analog input 5
B4	AN2	I(a)	ADC analog input 2
B5	AN0	I(a)	ADC analog input 0
B6	TxD1	O	Serial output 1
B7	TxD0	O	Serial output 0
B8	VSS	-	Ground (for I/O and for core)
B9	FUNC_DP	I/O(a)	USB function data +
B10	VSS	-	Ground (for I/O and for core)
B11	HOST_DP	I/O(a)	USB host data + (After hard reset is released, it becomes Low output status.)
B12	SCL	Ish/OD	E bus (I2C) clock I/O (5V tolerant)
B13	CS0N	O	SH2A-CPU chip selection 0 (Low active)
B14	CS3N	O	SH2A-CPU chip selection 3 (Low active)
B15	CS6N/PH5	O	SH2A-CPU chip selection 6 (Low active)/port PH 5
B16	ASEBRKAKN	Ish/O	Emulator break (Low active)
B17	TMS	I	JTAG test mode selection input
B18	PA5	I/O	Parallel port A 5
B19	PA1	I/O	Parallel port A 1
B20	IRQ0	Ish	Interrupt input 0
B21	VCCQ	-	The power supply +3.3V
B22	VDDPLL2	-	PLL1 analog power supply (Typ. +1.2V)
C1	MRDN/SDQM	O	Wave ROM enable read (Low active)/Waves SDRAM data is enable
C2	MCS0N	O	Wave ROM, SDRAM chip selection 0 (Low active)
C3	VSS	-	Ground (for I/O and for core)
C4	AN3	I(a)	ADC analog input 3
C5	AN1	I(a)	ADC analog input 1
C6	RxD1	Ish	Serial input 1
C7	RxD0	Ish	Serial input 0
C8	VSS	-	Ground (for I/O and for core)
C9	VBUS	I	USB cable connection monitor (5V tolerant)
C10	VSS	-	Ground (for I/O and for core)
C11	OVER_CURRENT_N	I	USB overcurrent detection (Low active) (5V tolerant)
C12	EICN	I	E bus reset output (Low active) (5V tolerant)
C13	CS1N/PH2	O	SH2A-CPU chip selection 1 (Low active)/port PH 2
C14	CS5N	O	SH2A-CPU chip selection 5 (Low active)
C15	ASEMDN	Ish	Debug mode setting (Low active)
C16	TDI	I	JTAG test data input
C17	PA7	I/O	Parallel port A 7
C18	PA4	I/O	Parallel port A 4
C19	WAITN	I	External wait input (Low active)
C20	VCCQ	-	The power supply +3.3V
C21	VSSPLL2	-	The power supply for SH2A PLL analog modules(0V)
C22	VDDPLL1	-	The Jlower supply for SH2A PLL. analog modules(1.2V)
D1	MD1	I/O	Wave ROM, SDRAM data bus 1
D2	MD0	I/O	Wave ROM , SDRAM data bus 0
D3	MD8	I/O	Wave ROM, SDRAM data bus 8
D4	VSS	-	Ground (for I/O and for core)
D5	VDD	-	The power supply +1.2V
D6	VSS	-	Ground (for I/O and for core)
D7	RESN	Ish	Hardware reset (Low active)
D8	VCCQ	-	The power supply +3.3V
D9	PULLUP_ENB	O	The USB pull-up is enable.
D10	VCCQ	-	The power supply +3.3V
D11	POWER_ENB	O	The USB voltage is enable.
D12	SDA	Ish/OD	E bus (I2C) data I/O (5V tolerant)
D13	CS2N/PH3	O	SH2A-CPU chip selection 2 (Low active)/port PH 3
D14	CS7N	O	SH2A-CPU chip selection 7 (Low active)
D15	TESTN	Ish	Test input (Low active)
D16	TCK	I	JTAG test clock input
D17	PA6	I/O	Parallel port A 6
D18	PA3	I/O	Parallel port A 3
D19	VCCQ	-	The power supply +3.3V
D20	A0	O	SH2A-CPU address bus 0
D21	VSSPLL1	-	PLL analog ground (0V)
D22	D31/PF7	I/O	SH2A-CPU data bus 31/port PF 7
E1	MD3	I/O	Wave ROM, SDRAM data bus 3
E2	MD2	I/O	Wave ROM, SDRAM data bus 2
E3	MD10	I/O	Wave ROM, SDRAM data bus 10
E4	MD9	I/O	Wave ROM, SDRAM data bus 9
E5	VSS	-	Ground (for I/O and for core)
E6	VDD	-	The power supply +1.2V
E7	VSS	-	Ground (for I/O and for core)
E8	VCCQ	-	The power supply +3.3V
E9	VSS	-	Ground (for I/O and for core)
E10	VCCQ	-	The power supply +3.3V
E11	VCCQ	-	The power supply +3.3V
E12	VCCQ	-	The power supply +3.3V
E13	VCCQ	-	The power supply +3.3V
E14	VSS	-	The power supply for internal cores(0V)
E15	VDD	-	The power supply +1.2V
E16	VDD	-	The power supply +1.2V
E17	VCCQ	-	The power supply +3.3V
E18	VCCQ	-	The power supply +3.3V
E19	WE3N/DQMUU/PH1	O	D31-D24 at byte writing of D31-D24 (active Low)/SDRAM is selected/port H 1
E20	A2	O	SH2A-CPU address bus 2
E21	D30/PF6	I/O	SH2A-CPU data bus 30/port PF 6
E22	D29/PF5	I/O	SH2A-CPU data bus 29/port PF 5
F1	MD5	I/O	Wave ROM, SDRAM data bus 5
F2	MD4	I/O	Wave ROM, SDRAM data bus 4
F3	MD12	I/O	Wave ROM, SDRAM data bus 12
F4	MD11	I/O	Wave ROM, SDRAM data bus 11
F5	VDD	-	The power supply +1.2V
F18	VDD	-	The power supply +1.2V
F19	A3	O	SH2A-CPU address bus 3
F20	A4	O	SH2A-CPU address bus 4
F21	D28/PF4	I/O	SH2A-CPU data bus 28/port PF 4
F22	D27/PF3	I/O	SH2A-CPU data bus 27/port PF 3
G1	MD7	I/O	Wave ROM, SDRAM data bus 7
G2	MD6	I/O	Wave ROM, SDRAM data bus 6
G3	MD14	I/O	Wave ROM, SDRAM data bus 14
G4	MD13	I/O	Wave ROM, SDRAM data bus 13
G5	VSS	-	Ground (for I/O and for core)
G18	VSS	-	Ground (for I/O and for core)
G19	A5	O	SH2A-CPU address bus 5
G20	A6	O	SH2A-CPU address bus 6
G21	D26/PF2	I/O	SH2A-CPU data bus 26/port PF 2
G22	D25/PF1	I/O	SH2A-CPU data bus 25/port PF 1
H1	MA25/SCASN	O	Wave ROM, SDRAM address bus 25/CAS output for wave SDRAM (Low active)
H2	MA26/SCKE	O	Wave ROM, SDRAM address bus 26/Wave SDRAM clock is enable
H3	MA17/NFD1	O/, I/O	Wave ROM, SDRAM address bus 17/Wave NAND flash data bus 1
H4	MD15	I/O	Wave ROM, SDRAM data bus 15
H5	VCCQ	-	The power supply +3.3V
H18	VCCQ	-	The power supply +3.3V
H19	A7	O	SH2A-CPU address bus 7
H20	A8	O	SH2A-CPU address bus 8
H21	D24/PF0	I/O	SH2A-CPU data bus 24/port PF 0
H22	D23/PE7	I/O	SH2A-CPU data bus 23/port PE 7
J1	MA15	O	Wave ROM, SDRAM address bus 15(SDRAM bank selection 1)
J2	MA16/NFD0	O/, I/O	Wave ROM, SDRAM address bus 16/Wave NAND flash data bus 0
J3	MA23/NFD7	O/, I/O	Wave ROM, SDRAM address bus 23/Wave NAND flash data bus 7
J4	MA24/SRASN	O	Wave ROM, SDRAM address bus 24/RAS output for wave SDRAM (Low active)
J5	VSS	-	Ground (for I/O and for core)
J9	VSS	-	Ground (for I/O and for core)
J10	VSS	-	Ground (for I/O and for core)
J11	VSS	-	Ground (for I/O and for core)
J12	VSS	-	Ground (for I/O and for core)
J13	VSS	-	Ground (for I/O and for core)
J14	VSS	-	Ground (for I/O and for core)
J18	VSS	-	Ground (for I/O and for core)
J19	A9	O	SH2A-CPU address bus 9
J20	A10	O	SH2A-CPU address bus 10
J21	D22/PE6	I/O	SH2A-CPU data bus 22/port PE 6
J22	D21/PE5	I/O	SH2A-CPU data bus 21/port PE 5
K1	MA11	O	Wave ROM, SDRAM address bus 11
K2	MA12	O	Wave ROM, SDRAM address bus 12
K3	MA13	O	Wave ROM, SDRAM address bus 13(When 256Mbit SDRAM is connected, use it.)
K4	MA14	O	Wave ROM, SDRAM address bus 14(SDRAM bank selection 0)
K5	VDD	-	The power supply +1.2V
K9	VSS	-	Ground (for I/O and for core)
K10	VSS	-	Ground (for I/O and for core)
K11	VSS	-	Ground (for I/O and for core)
K12	VSS	-	Ground (for I/O and for core)
K13	VSS	-	Ground (for I/O and for core)
K14	VSS	-	Ground (for I/O and for core)
K18	VDD	-	The power supply +1.2V
K19	A11	O	SH2A-CPU address bus 11
K20	A12	O	SH2A-CPU address bus 12
K21	D20/PE4	I/O	SH2A-CPU data bus 20/port PE 4
K22	D19/PE3	I/O	SH2A-CPU data bus 19/port PE 3
L1	MA22/NFD6	O/, I/O	Wave ROM, SDRAM address bus 22/Wave NAND flash data bus 6
L2	MA21/NFD5	O/, I/O	Wave ROM, SDRAM address bus 21/Wave NAND flash data bus 5
L3	MA20/NFD4	O/, I/O	Wave ROM, SDRAM address bus 20/Wave NAND flash data bus 4
L4	MA9	O	Wave ROM, SDRAM address bus 9
L5	MA10	O	Wave ROM, SDRAM address bus 10
L9	VSS	-	Ground (for I/O and for core)
L10	VSS	-	Ground (for I/O and for core)
L11	VSS	-	Ground (for I/O and for core)
L12	VSS	-	Ground (for I/O and for core)
L13	VSS	-	Ground (for I/O and for core)
L14	VSS	-	Ground (for I/O and for core)
L18	CKE	O	The clock is enable for SDRAM
L19	A13	O	SH2A-CPU address bus 13
L20	A14	O	SH2A-CPU address bus 14
L21	D18/PE2	I/O	SH2A-CPU data bus 18/port PE 2
L22	D17/PE1	I/O	SH2A-CPU data bus 17/port PE 1

PIN NO.	NAME	I/O	FUNCTION	PIN NO.	NAME	I/O	FUNCTION
M1	MA19/NFD3	O/, I/O	Wave ROM, SDRAM address bus 19/Wave NAND flash data bus 3	V17	VDD	-	The power supply +1.2V
M2	MA18/NFD2	O/, I/O	Wave ROM, SDRAM address bus 18/Wave NAND flash data bus 2	V18	VCCQ	-	The power supply +3.3V
M3	MA8	O	Wave ROM, SDRAM address bus 8	V19	A24	O	SH2A-CPU address bus 24
M4	MA7	O	Wave ROM, SDRAM address bus 7	V20	A23	O	SH2A-CPU address bus 23
M5	MA6	O	Wave ROM, SDRAM address bus 6	V21	D5	I/O	SH2A-CPU data bus 5
M9	VSS	-	Ground (for I/O and for core)	V22	D6	I/O	SH2A-CPU data bus 6
M10	VSS	-	Ground (for I/O and for core)	W1	PB6	I/O	Parallel port B 6
M11	VSS	-	Ground (for I/O and for core)	W2	PB7	I/O	Parallel port B 7
M12	VSS	-	Ground (for I/O and for core)	W3	ED0/PC0	I/O	External CPU data bus 0/Port C 0
M13	VSS	-	Ground (for I/O and for core)	W4	VDD	-	The power supply +1.2V
M14	VSS	-	Ground (for I/O and for core)	W5	ED10/PD2	I/O	External CPU data bus 10/Port D 2
M18	A1	O	SH2A-CPU address bus 1	W6	ED14/PD6	I/O	External CPU data bus 14/Port D 6
M19	WE2N/DQMUL/PH0	O	D23-D16 at byte writing of D23-D16 (active Low)/SDRAM is selected/port H 0	W7	EA3/PK2	I/O	External CPU address bus 3/Port K 2
M20	CASLN	O	CAS output for SDRAM (Low active)	W8	RDQ1	I/O	SDRAM data bus 1 for DSP
M21	D16/PE0	I/O	SH2A-CPU data bus 16/port PE 0	W9	RDQ3	I/O	SDRAM data bus 3 for DSP
M22	VSS	-	The power supply for internal cores(0V)	W10	RDQ5	I/O	SDRAM data bus 5 for DSP
N1	MA5	O	Wave ROM, SDRAM address bus 5	W11	RDQ7	I/O	SDRAM data bus 7 for DSP
N2	MA4		Wave ROM, SDRAM address bus 4	W12	RRASN	O	RAS output of SDRAM for DSP (Low active)
N3	MA3	O	Wave ROM, SDRAM address bus 3	W13	RA11	O	SDRAM address bus 11 for DSP
N4	MA2	O	Wave ROM, SDRAM address bus 2	W14	RA2	O	SDRAM address bus 2 for DSP
N5	VDD	-	The power supply +1.2V	W15	RA4	O	SDRAM address bus 4 for DSP
N9	VSS	-	Ground (for I/O and for core)	W16	AUXI/DREQ3/PK7	I	AUX input/DMA forwarding demand input from external device to channel 3/Port K7
N10	VSS	-	Ground (for I/O and for core)	W17	SDI0/PK5	I	Serial audio input 0/port K5
N11	VSS	-	Ground (for I/O and for core)	W18	BW_MD0	I	Setting of width of SH2A-CPU data bus
N12	VSS	-	Ground (for I/O and for core)	W19	VCCQ	-	The power supply +3.3V
N13	VSS	-	Ground (for I/O and for core)	W20	A25	O	SH2A-CPU address bus 25
N14	VSS	-	Ground (for I/O and for core)	W21	D3	I/O	SH2A-CPU data bus 3
N18	VDD	-	The power supply +1.2V	W22	D4	I/O	SH2A-CPU data bus 4
N19	RASLN	O	RAS output for SDRAM (Low active)	Y1	ED1/PC1	I/O	External CPU data bus 1/Port C 1
N20	WE1N/DQMLU	O	D15-D8 at byte writing of D15-D8 (active Low)/SDRAM is selected	Y2	ED2/PC2	I/O	External CPU data bus 2/Port C 2
N21	D15	I/O	SH2A-CPU data bus 15	Y3	VDD	-	The power supply for internal cores(1.2V)
N22	CKIO	O	Clock output for SDRAM	Y4	ED7/PC7	I/O	External CPU data bus 7/Port C 7
P1	MWRN	O	Wave ROM, SDRAM write enable (Low active)	Y5	ED11/PD3	I/O	External CPU data bus 11/Port D 3
P2	MCS1N/PG0	O	Wave ROM, SDRAM chip selection 1 (Low active)/port G 0	Y6	ED15/PD7	I/O	External CPU data bus 15/Port D 7
P3	MCS3N/MA27/PG2	O	Wave ROM, SDRAM chip selection 3 (Low active)/Wave ROM address bus 27/port G 2	Y7	ERDN/PK3	I/O	External CPU lead is enable (Low active)/Port K 3
P4	BTCHG	Ish	Switch control of boot ROM	Y8	RDQ2	I/O	SDRAM data bus 2 for DSP
P5	VSS	-	Ground (for I/O and for core)	Y9	RDQ4	I/O	SDRAM data bus 4 for DSP
P9	VSS	-	Ground (for I/O and for core)	Y10	RDQ6	I/O	SDRAM data bus 6 for DSP
P10	VSS	-	Ground (for I/O and for core)	Y11	RWEN	O	WE output of SDRAM for DSP (Low active)
P11	VSS	-	Ground (for I/O and for core)	Y12	RCASN	O	CAS output of SDRAM for DSP (Low active)
P12	VSS	-	Ground (for I/O and for core)	Y13	RBS	O	SDRAM bank selection for DSP
P13	VSS	-	Ground (for I/O and for core)	Y14	RA1	O	SDRAM address bus 1 for DSP
P14	VSS	-	Ground (for I/O and for core)	Y15	RA3	O	SDRAM address bus 3 for DSP
P18	VSS	-	Ground (for I/O and for core)	Y16	DITO/PH7	O	Digital audio output/Port H7
P19	A16	O	SH2A-CPU address bus 16	Y17	SYI	Ish	Synchronous input from external device
P20	A15	O	SH2A-CPU address bus 15	Y18	SDI1/DREQ2/PK6	I	Synchronous input from external device
P21	D13	I/O	SH2A-CPU data bus 13	Y19	SDO0	O	Serial audio output 0
P22	D14	I/O	SH2A-CPU data bus 14	Y20	VCCQ	-	The power supply +3.3V
R1	MCS2N/MA28/PG1	O	Wave ROM, SDRAM chip selection 2 (Low active)/Wave ROM address bus 28/port G 1	Y21	D1	I/O	SH2A-CPU data bus 1
R2	NFCSN	O	Wave NAND flash chip is enable (Low active)	Y22	D2	I/O	SH2A-CPU data bus 2
R3	NFRDY	I	Lady input for shape of waves NAND flash	AA1	ED3/PC3	I/O	External CPU data bus 3/Port C 3
R4	NFRDFB	Ish	Wave NAND flash data taking lead enable input	AA2	VDD	-	The power supply +1.2V
R5	VCCQ	-	The power supply +3.3V	AA3	ED5/PC5	I/O	External CPU data bus 5/Port C 5
R18	VCCQ	-	The power supply +3.3V	AA4	ED8/PD0	I/O	External CPU data bus 8/Port D 0
R19	A18	O	SH2A-CPU address bus 18	AA5	ED12/PD4	I/O	External CPU data bus 12/Port D 4
R20	A17	O	SH2A-CPU address bus 17	AA6	EA1/PK0	I/O	External CPU address bus 1/Port K 0
R21	D11	I/O	SH2A-CPU data bus 11	AA7	EWRN/PK4	I/O	External CPU light is enable (Low active)/Port K 4
R22	D12	I/O	SH2A-CPU data bus 12	AA8	RDQ15	I/O	SDRAM data bus 15 for DSP
T1	SCLK	O	Clock output for shape of waves SDRAM	AA9	RDQ13	I/O	SDRAM data bus 13 for DSP
T2	NFRDN/PG3	O	Wave NAND flash enable lead (Low active)/port G 3	AA10	RDQ11	I/O	SDRAM data bus 11 for DSP
T3	NFWEN/PG4	O	Wave NAND flash enable lead (Low active)/port G 4	AA11	RDQ9	I/O	SDRAM data bus 9 for DSP
T4	NFWPN/PG5	O	Wave NAND flashlight protecting (Low active)/port G 5	AA12	RCLK	O	SDRAM mask output for DSP
T5	VSS	-	The power supply for internal cores(0V)	AA13	RA12	O	SDRAM address bus 12 for DSP
T18	VSS	-	The power supply for internal cores(0V)	AA14	RA9	O	SDRAM address bus 9 for DSP
T19	A20	O	SH2A-CPU address bus 20	AA15	RA7	O	SDRAM address bus 7 for DSP
T20	A19	O	SH2A-CPU address bus 19	AA16	RA5	O	SDRAM address bus 5 for DSP
T21	D9	I/O	SH2A-CPU data bus 9	AA17	WCLK2/SDO3	O	Word clock output 2/Serial audio output 3
T22	D10	I/O	SH2A-CPU data bus 10	AA18	BCLK	O	Bit clock output /(After hard reset is released, the H/L change is started)
U1	NFALE/PG6	O	Wave NAND flash address is enable/port G 6	AA19	SDO1	O	Serial audio output 1
U2	NFCLE/PG7	O	Wave NAND flash command is enable/port G 7	AA20	RDWRN	O	The SH2A-CPU lead light is enable
U3	PB0	I/O	Parallel port B 0	AA21	VCCQ	-	The power supply +3.3V
U4	PB1	I/O	Parallel port B 1	AA22	D0	I/O	SH2A-CPU data bus 0
U5	VDD	-	The power supply +1.2V	AB1	VDD	-	The power supply +1.2V
U18	VCCQ	-	The power supply +3.3V	AB2	ED4/PC4	I/O	External CPU data bus 4/Port C 4
U19	A22	O	SH2A-CPU address bus 22	AB3	ED6/PC6	I/O	External CPU data bus 6/Port C 6
U20	A21	O	SH2A-CPU address bus 21	AB4	ED9/PD1	I/O	External CPU data bus 9/Port D 1
U21	D7	I/O	SH2A-CPU data bus 7	AB5	ED13/PD5	I/O	External CPU data bus 13/Port D 5
U22	D8	I/O	SH2A-CPU data bus 8	AB6	EA2/PK1	I/O	External CPU address bus 2/Port K 1
V1	PB2	I/O	Parallel port B 2	AB7	ECSN	Ish	External CPU chip selection
V2	PB3	I/O	Parallel port B 3	AB8	RDQ14	I/O	SDRAM data bus 14 for DSP
V3	PB4	I/O	Parallel port B 4	AB9	RDQ12	I/O	SDRAM data bus 12 for DSP
V4	PB5	I/O	Parallel port B 5	AB10	RDQ10	I/O	SDRAM data bus 10 for DSP
V5	VDD	-	Parallel port B 5	AB11	RDQ8	I/O	SDRAM data bus 8 for DSP
V6	VDD	-	The power supply +1.2V	AB12	RDQM	O	SDRAM mask output for DSP
V7	VSS	-	Ground (for I/O and for core)	AB13	RA13	O	SDRAM address bus 13 for DSP
V8	RDQ0	I/O	SDRAM data bus 0 for DSP	AB14	RA10	O	SDRAM address bus 13 for DSP
V9	VSS	-	Ground (for I/O and for core)	AB15	RA8	O	SDRAM address bus 8 for DSP
V10	VCCQ	-	The power supply +3.3V	AB16	RA6	O	SDRAM address bus 6 for DSP
V11	VCCQ	-	The power supply +3.3V	AB17	SYSCLK	O	System clock output/(After hard reset is released, the H/L change is started)
V12	VCCQ	-	The power supply +3.3V	AB18	WCLK	O	Word clock output (After hard reset is released, the H/L change is started)
V13	VCCQ	-	The power supply +3.3V	AB19	"SYSCLK2/SDO2/PH6"	O	System clock output 2: For TI Co. DAC/Serial audio input 2/Port H 6
V14	VSS	-	Ground (for I/O and for core)	AB20	RDN	O	The SH2A-CPU lead is enable (Low active)
V15	VCCQ	-	The power supply +3.3V	AB21	"WE0N/DQMLL"	O	D7-D0 at byte writing of D7-D0 (active Low)/SDRAM is selected
V16	CKOEN	I	Clock output control for SDRAM	AB22	VCCQ	-	The power supply +3.3V

■ CIRCUIT BOARDS

CONTENTS

Note: See parts list for details of circuit board component parts.

• DM Circuit Board

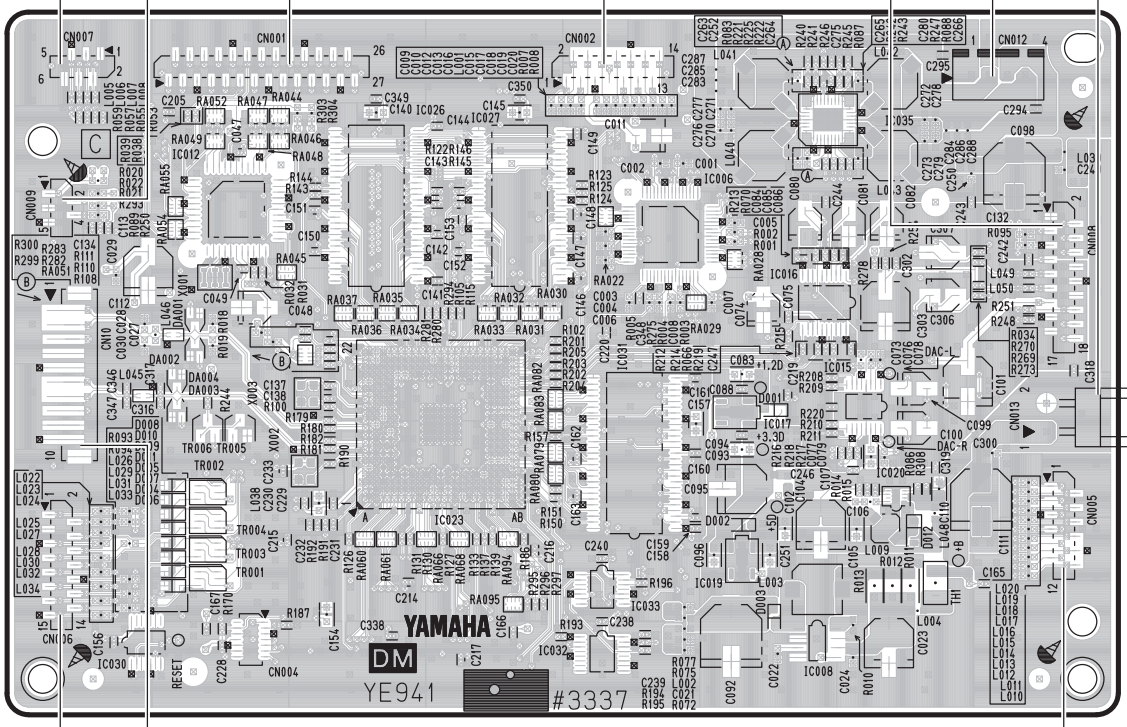

Component Side

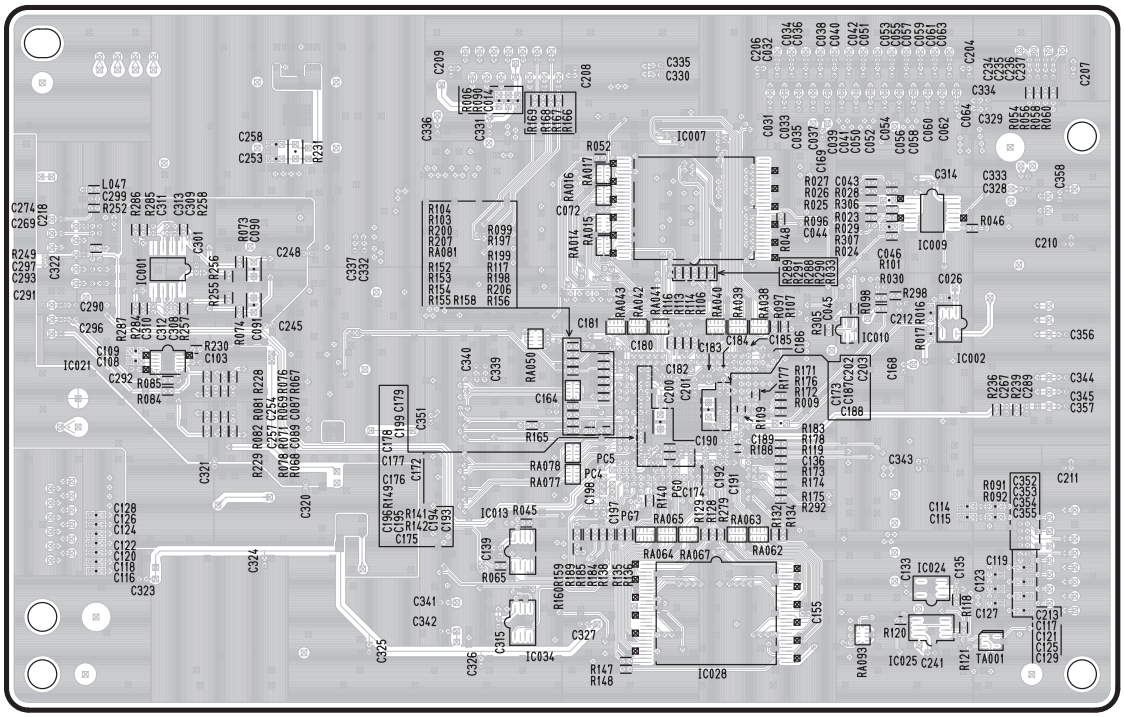

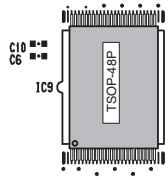

• When 48P-TSOP is mounted to the location of IC007, its pin no.1 must be positioned to the pin no.3 of 56P-TSOP.

Pattern Side

2NA-ZE90130

• AJACK Circuit Board

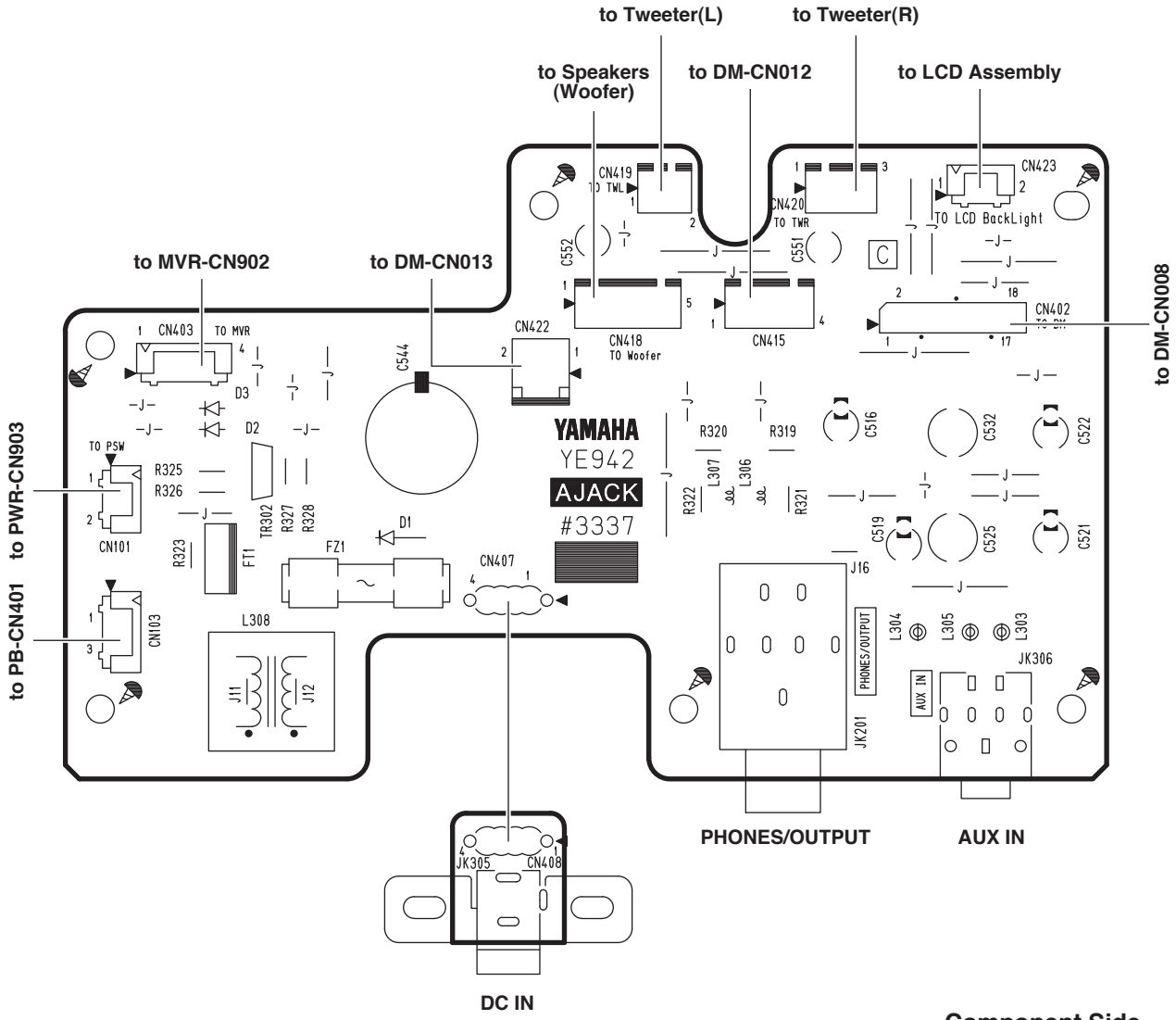

Component Side

• DJACK Circuit Board

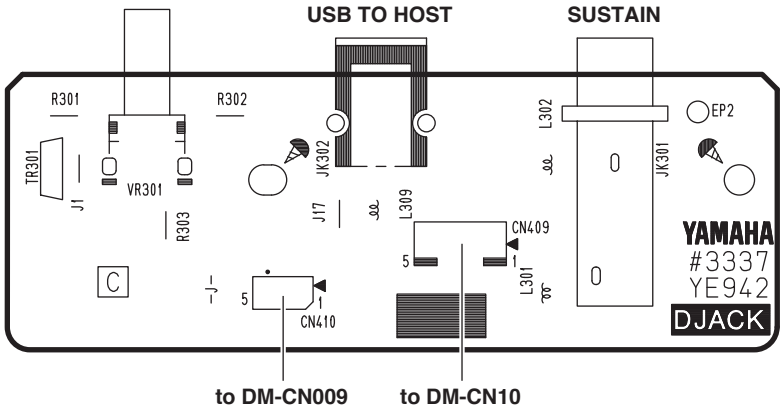

Component Side

• USB Circuit Board

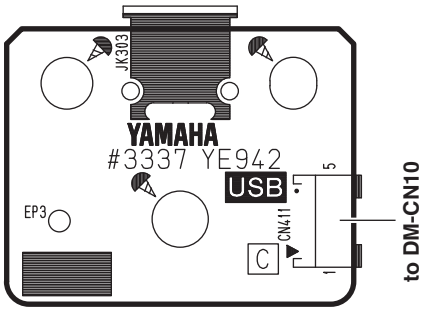

Component Side

AJACK : 2NA-ZE90110 2
DJACK : 2NA-ZE90110 2
USB : 2NA-ZE90110 2

• ENC Circuit Board

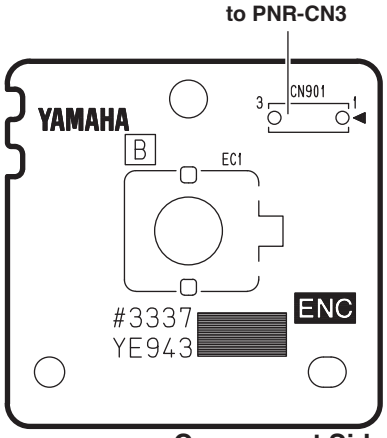

Component Side

• MVR Circuit Board

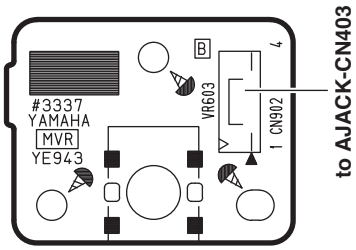

Component Side

• PWR Circuit Board

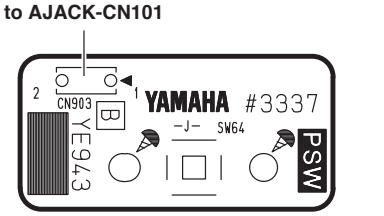

Component Side

• PB Circuit Board

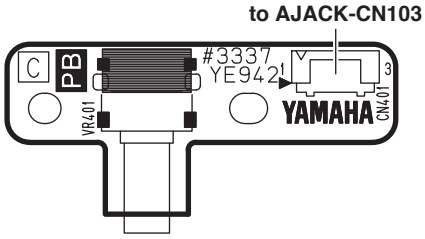

Component Side

• MKO Circuit Board

Note: MKO circuit board is used as a FFC CABLE holder.

Component Side

• PEDAL Circuit Board

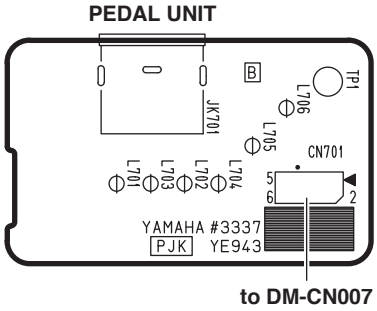

Component Side

ENC : 2NA-ZE90120 3
PWR : 2NA-ZE90120 3
PEDAL : 2NA-ZE90120 3
MVR : 2NA-ZE90120 3
PB : 2NA-ZE90110 2
MKO : 2NA-ZE90120 3

• PNL Circuit Board

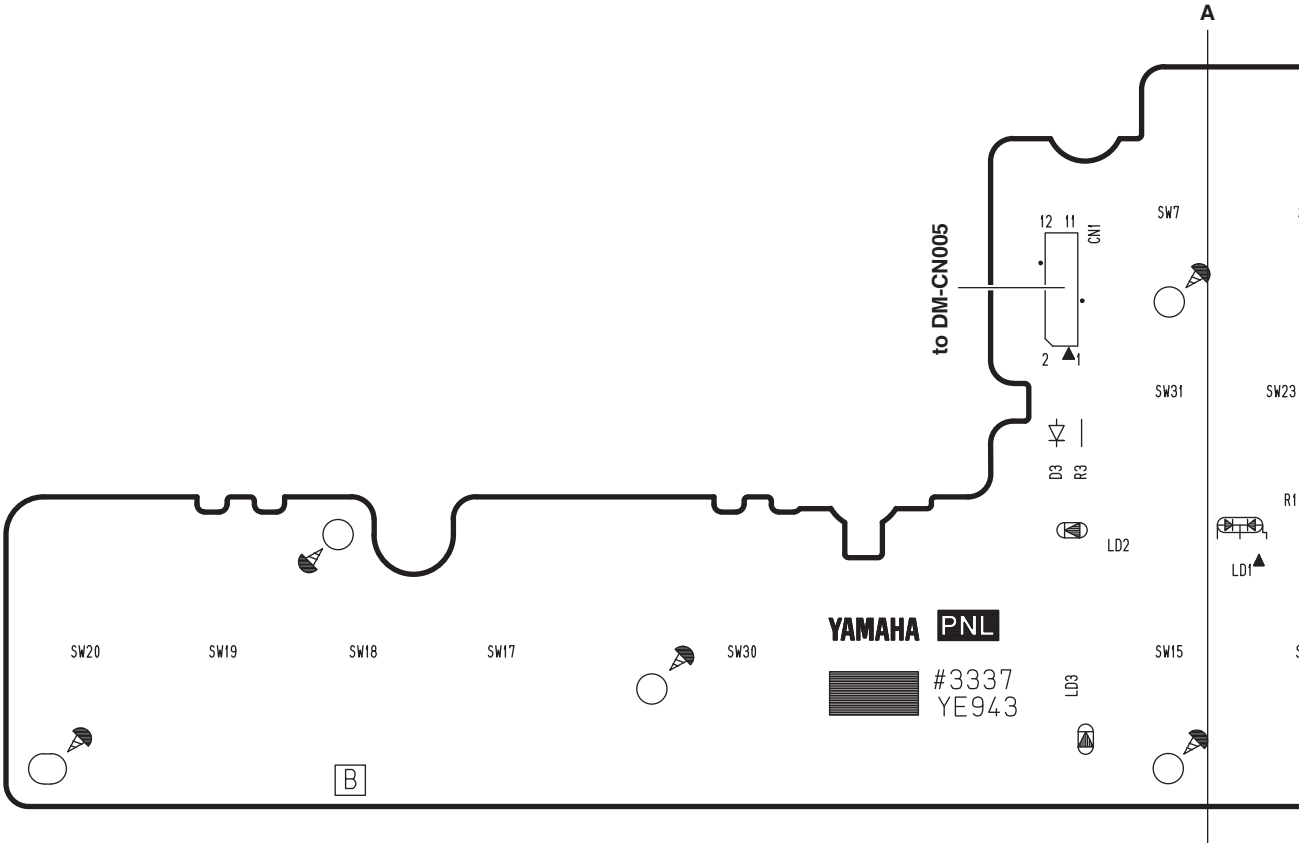

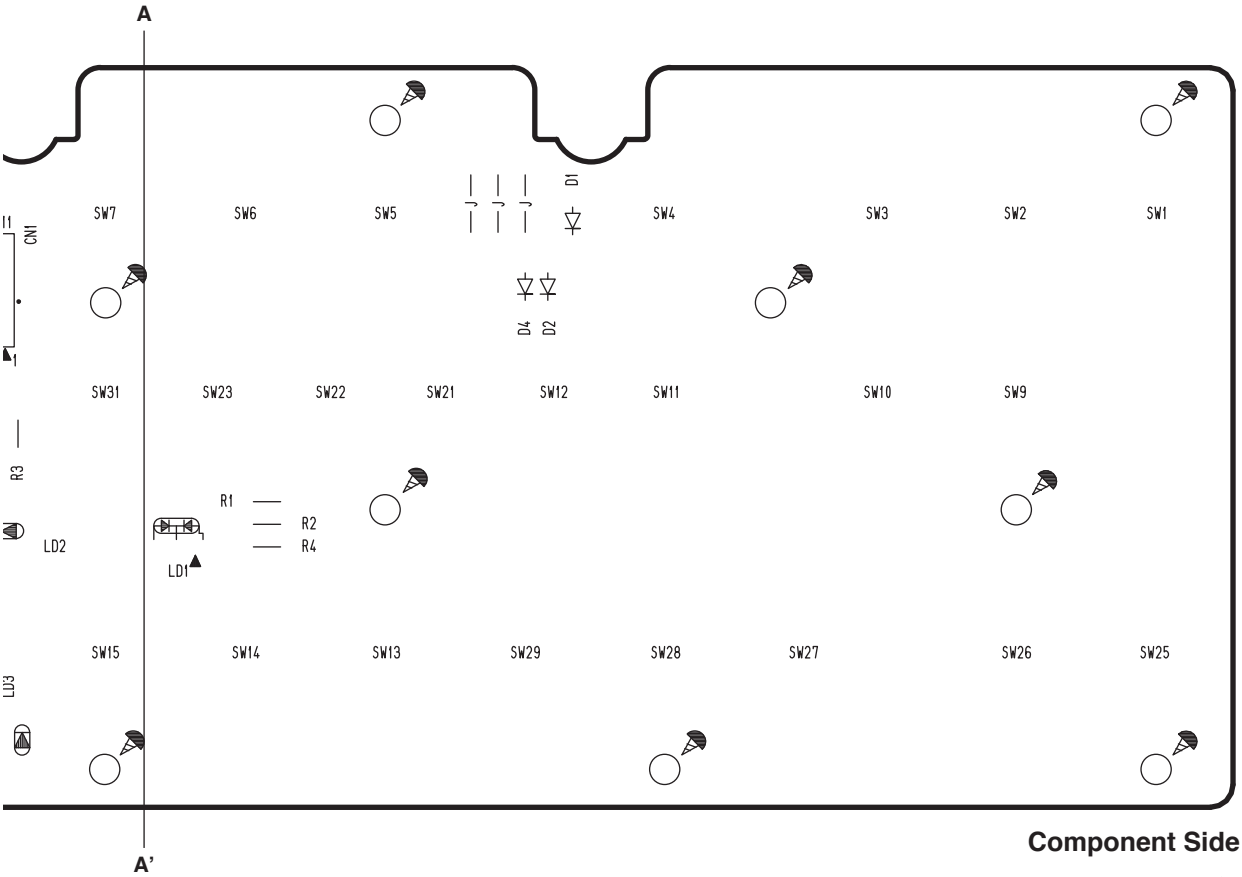

Component Side

2NA-ZE90120 3

• PNR Circuit Board

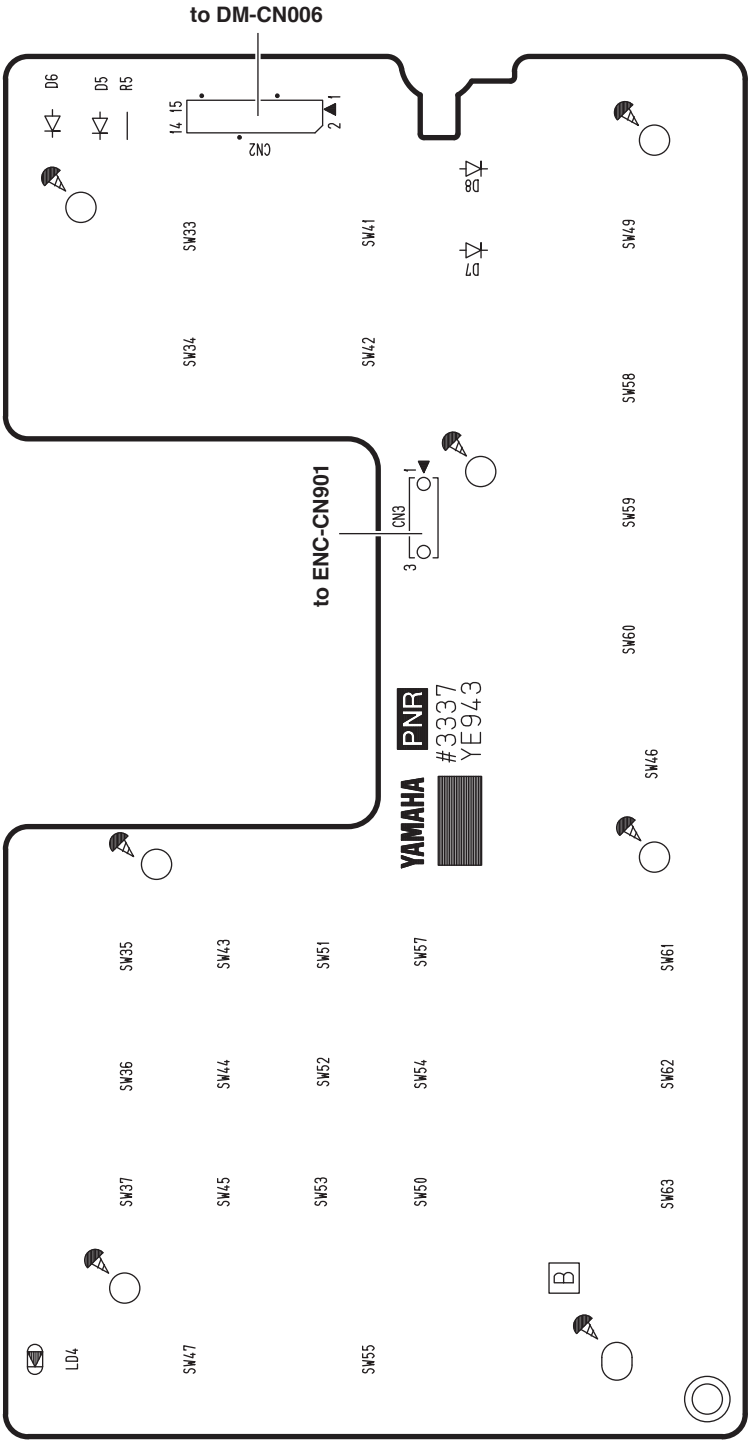

Component Side

2NA-ZE90120 3

• GHL88H Circuit Board

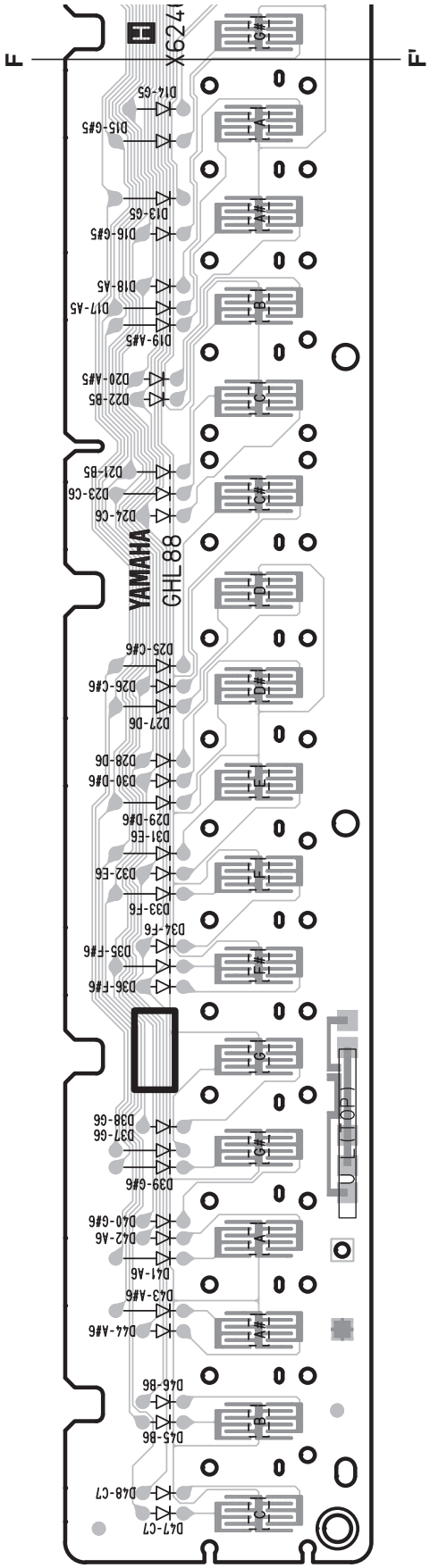

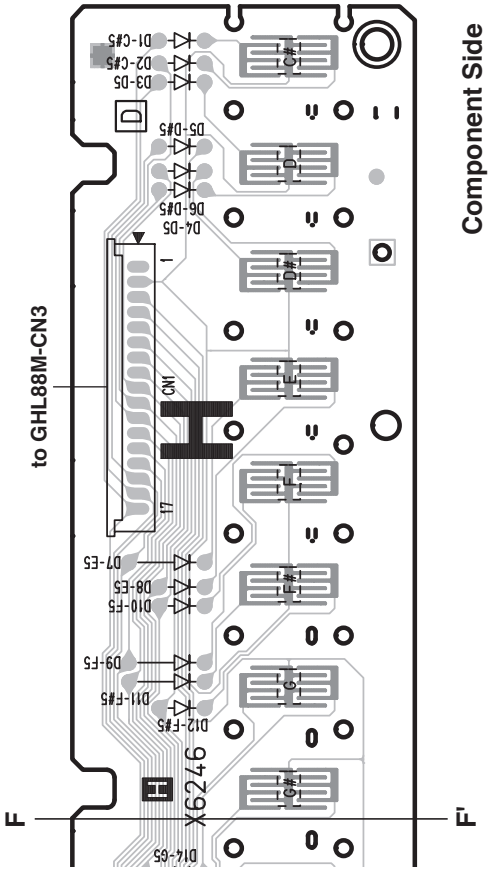

2NAK8-WF46250

• GHL88L Circuit Board

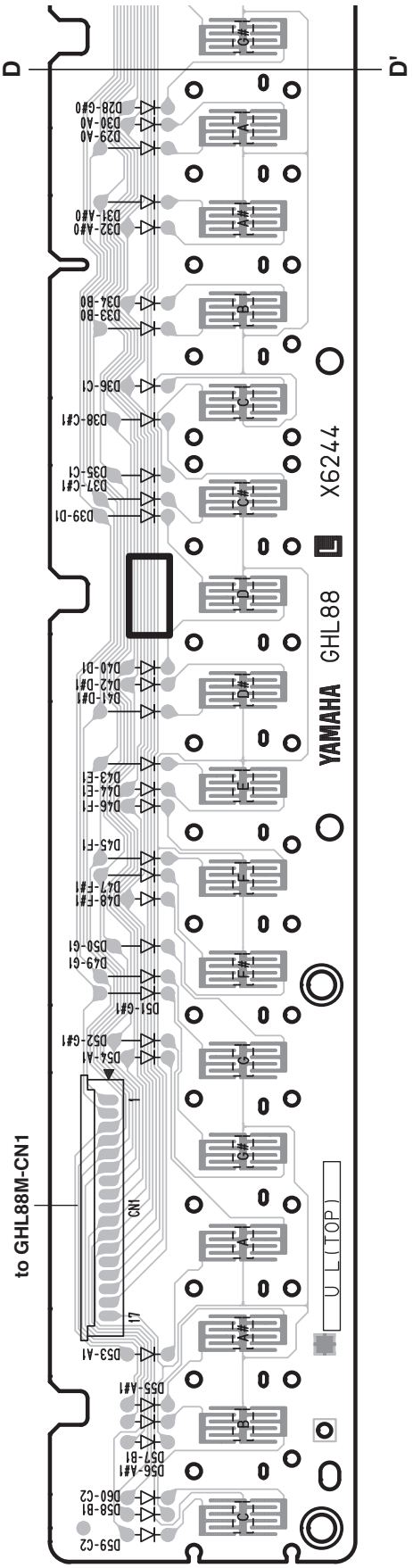

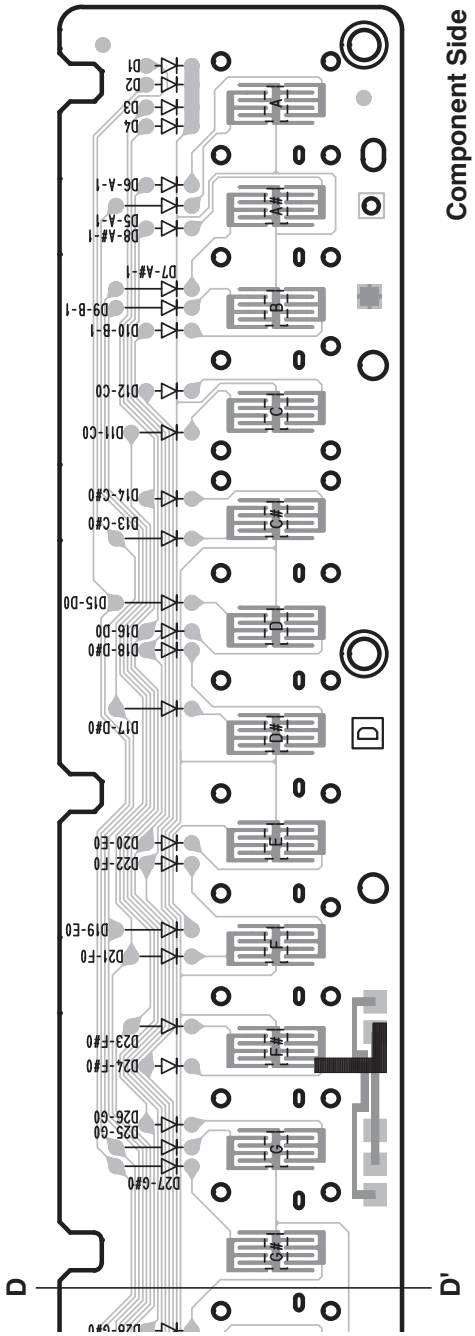

2NAK8-WF46230

• GHL88M Circuit Board

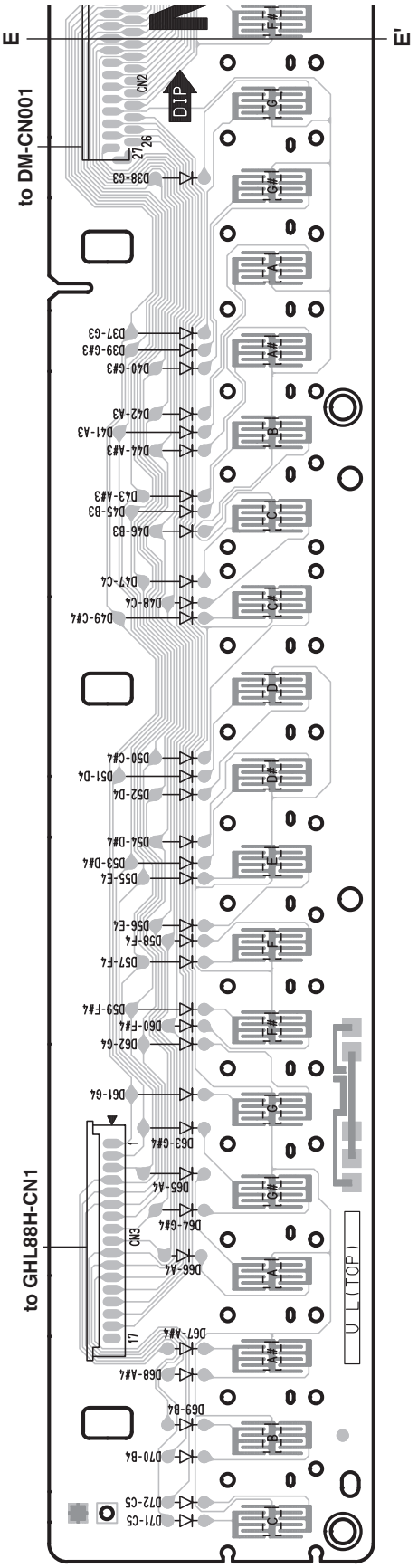

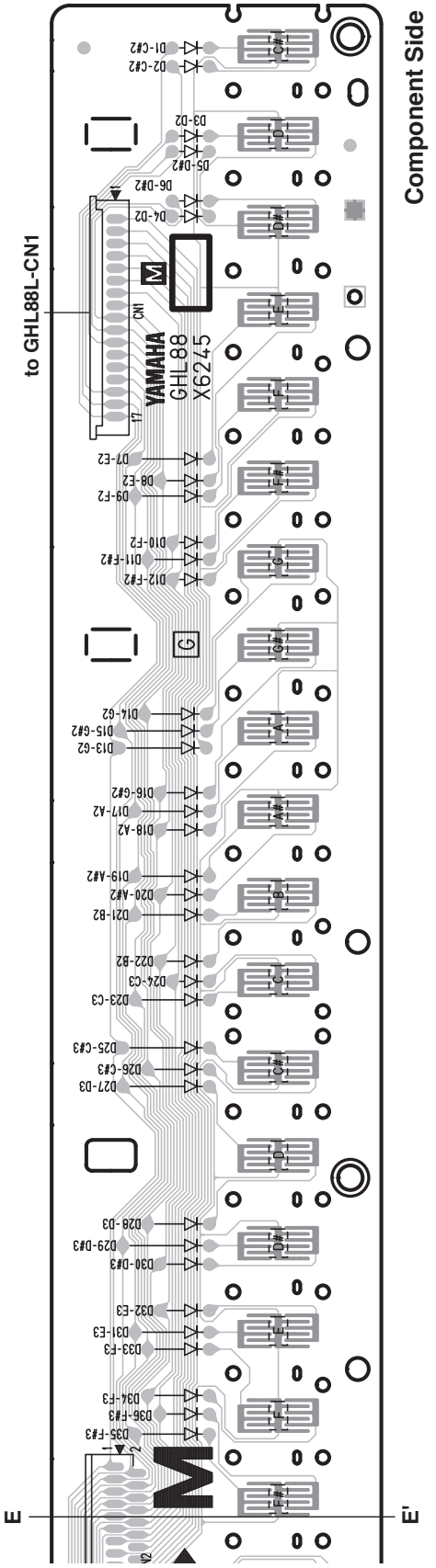

2NAK8-WF46240 2

■ DM Circuit Board Test Method

The DM Circuit Board is provided with test points for service check purposes.
Check the test points on the DM Circuit Board if the following symptoms appear.

Symptoms and check items

1) No LCD display with Power SW ON --> Check items 1 to 5 sequentially

2) No sound or distorted sound --> Check items 1, 2 and 3, and OUTPUT check items.

Test Point

NO.	Test Point	Circuit	Judgment criteria	Measured by	Parts with possible defects
①	+B	Power supply for DM Circuit Board	More than 11.0V	Multimeter	FT01 or FZ1 (On AJACK Circuit Board)
②	+5D	5V power for digital circuit	5.0V±0.5V	Multimeter	IC020
③	+3.3D	3.3V power for digital circuit	3.3V±0.3V	Multimeter	IC019
④	+1.2D	1.2V power for digital circuit	1.2V±0.1V	Multimeter	IC017
⑤	RESET	CPU & memory reset signal	3.3V±0.3V	Multimeter	IC024
⑥	OUT-L	DAC output L channel	There shall be audio output without distortion.	Signal Checker	IC015
⑦	OUT-R	DAC output R channel	There shall be audio output without distortion.	Signal Checker	IC015

Note: Use the standard AC adapter PA-150 or PA-150A for check operation.

Output

NO.	SPEAKER OUTPUT	PHONES/OUTPUT	DAC-L/R TEST POINT	Parts with possible defects
1	×	×	×	IC023
2	×	×	○	IC023 or Error Detect
3	○	×	×	IC015
4	×	○	○	IC035
5	○	×	○	IC021 or HP Jack

Note: “○” mark expresses normalcy and “×” mark expresses a failed state.

DM Circuit Board (ZE901300)

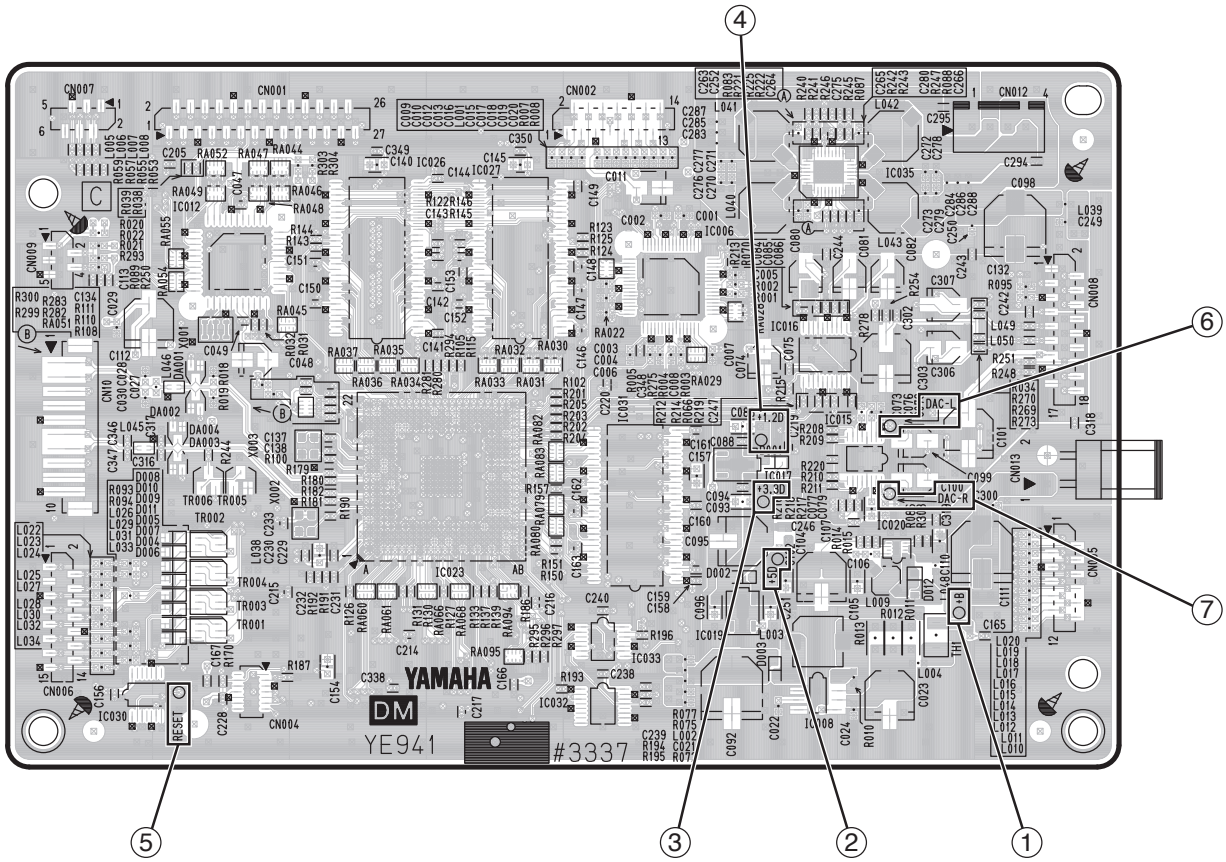

Component Side

■ TEST PROGRAM

*	***If you execute the test No.54 (Factory Set), then the user's preset data may be lost. Therefore, backup the user's data in advance.***

A. PREPARATION

1) PA-150A or PA-150 (AC adaptor) is used.
2) Measuring device: Frequency counter, which can detect thousandth value or more, Level meter (with JIS-C filter), Oscilloscope
   Note: Use a stereo plug and connect a load resistor of 33Ω to the [PHONES/OUTPUT] jack for measurement unless otherwise specified. Input impedance of the measuring device should be 1 MΩ or more.
3) Jigs: Pedal unit (LP-7A or LP-7AWH), Foot switch (FC-4 or FC-5), USB cable, USB flash memory, USB-MIDI driver (*1), PC (Install a USB-MIDI driver(*1) in PC and finish the THROUGH setup.)

*1: Obtain the USB-MIDI driver from Yamaha official website.
(URL>>http://www.yamaha.com/kbdapps/)

B. HOW TO ENTER THE TEST PROGRAM

While pressing the C#2, F2 and G#2 keys, turn the [STANDBY/ON] switch on.

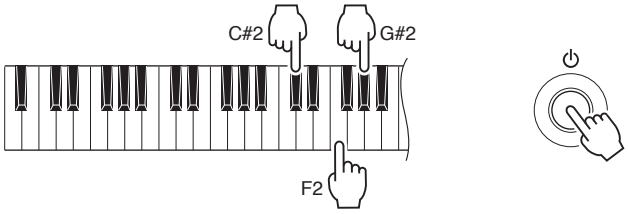

C. TEST PROCEDURE

1) When the test program is started, "TEST" will be displayed on the LCD.
2) Press the [-] or [+] button of the number buttons to select a test program item.
3) Press the [START/STOP] button to execute the test.

If the test result is OK, or the test item is completed, press the [START/STOP] button again to return to the test item selection display.

* Press the [-] or [+] button of the number buttons to select the next test program item.
* When the test result is OK, a plus sign (+) is added in front of its item name on display.

If the test result is NG, press the [DEMO/BGM] button or the lowest (leftmost) white key to return to the item selection display.

D. TEST PROGRAM LIST

TEST No.	LCD display	Test descriptions, Judging Criteria
1	**001 Version**	Displays version of the ROM. "*** **Prog**" "*** **Wave**" *** : Version
2	**002 Memory Chk1 All**	Checks the ROM, RAM, Wave ROM and Effect RAM connected to the CPU bus. If result is OK, Test No.3 to 7 test can be skipped. Confirm that "**Memory All OK**" is displayed on the LCD.
3	**003 Rom Chk1**	Checks the ROM connected to the CPU bus. Confirm that "**Rom OK**" is displayed on the LCD.
4	**004 Ram Chk1**	Checks the RAM connected to the CPU bus. Confirm that "**Ram OK**" is displayed on the LCD.
6	**006 Wave Rom Chk1**	Checks the Wave ROM connected to the CPU bus. Confirm that "**Wave Rom OK**" is displayed on the LCD.
7	**007 Effect Ram Chk1**	Checks the Effect RAM connected to the CPU bus. Confirm that "**Effect Ram OK**" is displayed on the LCD.
9	**009 Pit Chk**	Checks pitch accuracy. Connect the frequency counter to [PHONES/OUTPUT] jack. (Either L or R) Confirm that the correct signal is output. (441.0 Hz +/- 0.2 Hz)
10	**010 Output R**	Connect the level meter (with JIS-C filter) to the [PHONES/OUTPUT] jack. (33Ω load) Set the [MASTER VOLUME] control to the maximum position and check the output level. OUTPUT R: -12.0 +/- 2 dBu OUTPUT L: -60.0 dBu or less
11	**011 Output L**	Connect the level meter (with JIS-C filter) to the [PHONES/OUTPUT] jack. (33Ω load) Set the [MASTER VOLUME] control to the maximum position and check the output level. OUTPUT R: -60.0 dBu or less OUTPUT L: -12.0 +/- 2 dBu
16	**016 SP Mute Chk**	The C5 sound is played at L and R channels when the [START/STOP] button is pressed. Repeat the sound stop (MUTE ON) and the sound production (MUTE OFF) by pressing [+] or [-] button. Confirm that the sound stops at the speaker when MUTE ON. (The output of [PHONES/OUTPUT] jack does not stop.) * Do not insert any plugs to [PHONES/OUTPUT] jack.
17	**017 Mute Chk**	Connect the headphones to the [PHONES/OUTPUT] jack. The C5 sound is played at L and R channels when the [START/STOP] button is pressed. Repeat the sound stop (MUTE ON) and the sound production (MUTE OFF) by pressing [+] or [-] button. Confirm that the sound stops at both the speaker and the [PHONES/OUTPUT] jack, when MUTE ON. * Disconnect the headphones from [PHONES/OUTPUT] jack when check the speaker output.
18	**018 HP Chk**	"**HP In**" is displayed on the LCD when the [START/STOP] button is pressed. Connect the headphones to the [PHONES/OUTPUT] jack. Confirm that "**HP Out**" is displayed on the LCD. Disconnect the headphones from [PHONES/OUTPUT] jack. Confirm that "**HP OK**" is displayed on the LCD.
19	**019 AUX-IN Chk**	Confirm that "**Not Inserted**" is displayed when any plug is not inserted into the [AUX IN] jack. Confirm that "**Inserted**" is displayed when a plug is inserted into the [AUX IN] jack. (Loads: 33ohms to L ch and R ch) Input a sine wave (1 kHz, 0 dBu) into R ch of [AUX IN] terminal. (Do not input any signal into the L ch of [AUX IN] terminal.) Confirm that the output level at each terminal is as follows. OUTPUT R: -6.0 +/- 2 dBu OUTPUT L: -40.0 dBu or less Also, confirm that the output level at each terminal is reversed when L and R ch are reversely inputted.

TEST No.	LCD display	Test descriptions, Judging Criteria
21	**021 SW Chk**	Checks the switches on the panel. Press the switches as shown in the LCD. When a switch is pressed, a sound is played at the prescribed pitch. (Refer to the switch test item list on the p.38) Also, check that no key stick is existed. Confirm that "**SW OK**" is displayed on the LCD when all the switches are pressed as indicated. If more than two switches are pressed at a time, "**Over Two**" is displayed. Confirm that the rotary encoder is clockwise set to UP and is counterclockwise set to DOWN. To cancel the running test, press the [DEMO/BGM] button or the lowest key (white key C1) to return to the item selection display.
22	**022 All LED Chk**	Confirm that all LEDs turned on.
23	**023 Red LED Chk**	Confirm that all Red LEDs turned on.
24	**024 Green LED Chk**	Confirm that all Green LEDs turned on.
25	**025 LCD On**	Confirm that all the dots on the LCD are turned on.
26	**026 LCD Off**	Confirm that all the dots on the LCD are turned off.
27	**027 LCD Contrast Chk**	Checks the contrast of the LCD. Confirm that the LCD becomes blue (or white) when the contrast knob is turned clockwise (or counterclockwise). Adjust the contrast knob to the legible position of LCD.
29	**029 Master Vol Chk**	Set the main volume to the minimum position first, and move it to the maximum position. Confirm that "**Master Vol OK**" is displayed on the LCD.
30	**030 Emergency Circuit Chk**	The A3 sound is played at L and R channels when the [START/STOP] button is pressed. Repeat the sound stop (Emergency Circuit ON) and the sound production (Emergency Circuit OFF) by pressing [+] or [-] button. Confirm that the sound stops at both the speaker and the [PHONES/OUTPUT] jack, when Emergency Circuit ON. If the failure detection system is not detected, "**Emergency Circuit NG**" is displayed. * Disconnect the headphones from [PHONES/OUTPUT] jack, when check the speaker output.
31	**031 Pedal1 Chk**	Before power switch ON, Connect the pedal unit (LP-7A etc.) to the [PEDAL UNIT] jack. The C3 sound is played when the [START/STOP] button is pressed with the pedal released. The C4 sound is played when the soft (left) pedal is depressed. Released the pedal again and the sound will be stopped. Confirm that "**Pedal1 OK**" is displayed on the LCD.
32	**032 Pedal2 Chk**	Before power switch ON, Connect the pedal unit (LP-7A etc.) to the [PEDAL UNIT] jack. The C3 sound is played when the [START/STOP] button is pressed with the pedal released. The C4 sound is played when the sostenuto (center) pedal is depressed. Released the pedal again and the sound will be stopped. Confirm that "**Pedal2 OK**" is displayed on the LCD.
33	**033 Pedal3 Chk**	Before power switch ON, Connect the pedal unit (LP-7A etc.) to the [PEDAL UNIT] jack. The C3 sound is played when the [START/STOP] button is pressed with the pedal released. The G4 sound is played when the damper (right) pedal is pressed until the half position, and the C4 sound is played when the pedal is depressed fully. Released the pedal again and the sound will be stopped. Confirm that "**Pedal3 OK**" is displayed on the LCD.

TEST No.	LCD display	Test descriptions, Judging Criteria
34	**034 Pedal4 Chk**	Before power switch ON, Connect the foot switch (FC-4 or FC-5) to the [SUSTAIN] jack. The C3 sound is played when the [START/STOP] button is pressed with the pedal released. The C4 sound is played when the pedal is depressed. Released the pedal again and the sound will be stopped. Confirm that "**Pedal4 OK**" is displayed on the LCD.
35	**035 Pitch Bend Chk**	Confirm the position of the wheel is center. The G3 sound is played when the [PITCH BEND] wheel is rotated to maximum position and the C3 sound is played when the wheel is rotated to minimum position. The C4 sound is played when the wheel is returned center position. Confirm that "**Pitch Bend OK**" is displayed on the LCD.
37	**037 MIDI Chk**	Connect the PC with a USB-MIDI driver installed and the [USB TO HOST] terminal using a USB cable, and execute the test. (As for the PC, install a USB-MIDI driver in the PC and finish the THROUGH setup, in advance.) Confirm that the C4 sound is played and the LCD displays "**MIDI OK**".
38	**038 USB Connect Chk**	1. "**USB Connect1 --**" is displayed on the LCD when the [START/STOP] button is pressed. Connect the [USB TO DEVICE] and [USB TO HOST] terminals using the USB cable. Confirm that "**USB Connect2 --**" is displayed on the LCD. 2. Remove the USB cable from the [USB TO DEVICE] terminal, and insert a USB flash memory into the [USB TO DEVICE] terminal. Confirm that the C4 sound is played and the LCD displays "**USB Connect OK**".
39	**039 USB Strage Chk**	Connect a USB flash memory to the [USB TO DEVICE] terminal, and execute the test. (The USB memory must be formatted by the instrument.) Confirm that "**USB Storage OK**" is displayed on the LCD. In case of NG, the following message is displayed. "**USB Storage NG**": Failure in reading/writing "**NO Storage**": No media "**PROTECT**": Protected media
49	**049 Rom Chk2**	Checks the ROM connected to the CPU bus. (Full address) Confirm that "**Rom OK**" is displayed on the LCD. It will take about 60 seconds for the check.
50	**050 Ram Chk2**	Checks the RAM connected to the CPU bus. (Full address) Confirm that "**Ram OK**" is displayed on the LCD.
52	**052 Wave Rom Chk2**	Checks the Wave ROM connected to the CPU bus. (Full address) Confirm that "**Wave Rom OK**" is displayed on the LCD. It will take about 60 seconds for the check.
53	**053 Effect Ram Chk2**	Checks the Effect RAM connected to the CPU bus. (Full address) Confirm that "**Effect Ram OK**" is displayed on the LCD. It will take about 30 seconds for the check.
54	**054 Factory Set**	Initializes the entire backup area to reset to the factory default. "**Factory Set --**" is displayed on the LCD during the factory set. "**Factory Set End**" is displayed on the LCD when the factory set is finished. Do not turn off the power during this process.
55	**055 Test Exit**	This will leave the test program, reset the system and change to the play mode. Do not turn off the power until the main screen is displayed.

• Other Tests

Noise Level Check

Connect the level meter (with JIS-C filter) to the L/R of the [PHONES/OUTPUT] jack. (33 Ω load)

Set the [MASTER VOLUME] to the maximum level and check the noise level. Do not insert any plugs to [AUX IN] jack.

· PHONES L, R: –90 dBu or less

Switch test item list

Order	Switch Name	LCD Display	Note No.
1	DATA ENTRY +	Dial Up	C2
2	DATA ENTRY –	Dial Down	C#2
3	DEMO/BGM	Demo	D2
4	SCORE	Score	D#2
5	LYRICS	Lyrics	E2
6	REC	Song REC	F2
7	WAITING	Lesson Waiting	F#2
8	YOUR TEMPO	Lesson YourTmp	G2
9	MINUS ONE	Lesson MinusOne	G#2
10	SMART CHORD	Smart Chord	A2
11	STYLE RECOMMENDER	Style Recommend	A#2
12	R/1	Song 1	B2
13	L/2	Song 2	C3
14	3	Song 3	C#3
15	4	Song 4	D3
16	5	Song 5	D#3
17	A	Song A	E3
18	METRONOME ON/OFF	Metronome	F3
19	TEMPO/TAP	Tempo/TAP	F#3
20	ACMP ON/OFF	ACMP	G3
21	INTRO/ENDING/rit	Intro	G#3
22	MAIN/AUTO FILL	Main/Fill	A3
23	SYNC STOP	Sync Stop	A#3
24	SYNC START	Sync Start	B3
25	START STOP	Start/Stop	C4
26	BANK	Memory	C#4
27	REGIST MEMORY 1	Regist 1	D4
28	REGIST MEMORY 2	Regist 2	D#4
29	REGIST MEMORY 3	Regist 3	E4
30	REGIST MEMORY 4	Regist 4	F4
31	CATEGORY <<	Category –	F#4
32	CATEGORY >>	Category +	G4
33	EXIT	Exit	G#4
34	EXECUTE	Execute	A4
35	PORTABLE GRAND	Portable Grand	A#4
36	SONG	Song	B4
37	STYLE	Style	C5
38	VOICE	Voice	C#5
39	MUSIC DATABASE	MusicDataBase	D5
40	Tenkey 1	Tenkey 1	D#5
41	Tenkey 2	Tenkey 2	E5
42	Tenkey 3	Tenkey 3	F5
43	Tenkey 4	Tenkey 4	F#5
44	Tenkey 5	Tenkey 5	G5
45	Tenkey 6	Tenkey 6	G#5
46	Tenkey 7	Tenkey 7	A5
47	Tenkey 8	Tenkey 8	A#5
48	Tenkey 9	Tenkey 9	B5
49	Tenkey –	Tenkey –	C6
50	Tenkey 0	Tenkey 0	C#6
51	Tenkey +	Tenkey +	D6
52	FILE CONTROL	File Menu	D#6
53	FUNCTION	Function	E6
54	SPLIT ON/OFF	Split	F6
55	DUAL ON/OFF	Dual	F#6
56	HARMONY ON/OFF	Harmony	G6

■ BACKUP

The following data will be always maintained even if the power is turned off.
If you want to initialize backup data, use the "Clearing Backup data" operation of "INITIALIZATION" as explained below.
The "Clearing Backup data" does not delete the files that have been transferred from a computer or loaded from a USB flash memory.
If you want to delete the all files, see "Clearing files in flash memory area" below.

● Backup Data

- Registration Memory data
- Function Settings: Tuning, Split Point, Touch Sensitivity, Style Volume, Song Volume, Metronome Volume, Grade, Demo Group, Demo Play mode, Demo Cancel, Panel Sustain, Master EQ type, Chord Fingering, Auto Power Off setting, Damper Resonance ON/OFF, Output Gain, I.A. Control ON/OFF, I.A. Control Depth, Audio Volume, Aux IN Level

In addition to the Backup data above, all the User Songs and all the Song and Style files transferred from a computer or loaded from a USB flash memory will be maintained even if you turn off the power.

■ INITIALIZATION

This function erases the Backup data described above and Song/Style data, then restores all the default factory settings.
As required, execute one of the following two procedures.

・Clearing Backup data

This operation initializes the backup data.
Turn the power on by pressing the [⏻] (Standby/On) switch while holding the highest white key on the keyboard.

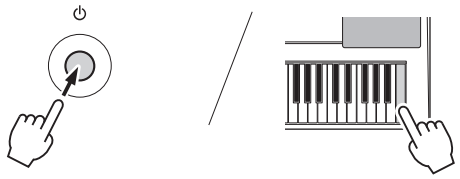

・Clearing files in flash memory area

This operation deletes all User Songs and all the Songs and Styles that have been transferred from a computer or loaded from a USB flash memory. Turn the power on by pressing the [⏻] (Standby/On) switch while simultaneously holding the highest white key and the three highest black keys on the keyboard.

When you "Clearing files in flash memory area", Song data and Style data you have purchased and downloaded will also be cleared. Make sure to save your important data by transferring to a computer.

■ SYSTEM BOOTING FLOW CHART

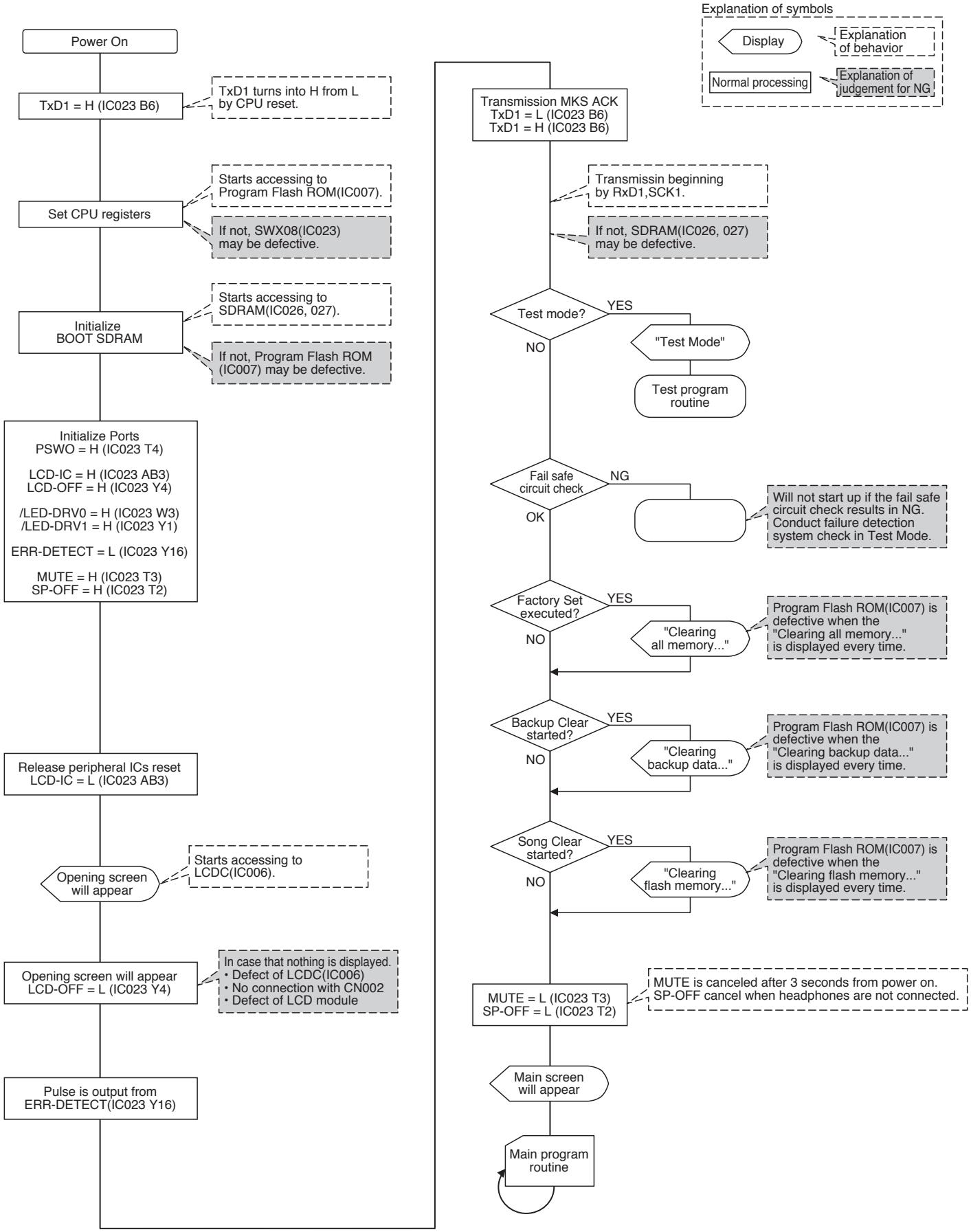

* "Factory Set executed" refers to the condition of turning on the power after executing "Factory Set" in the Test Program.
* As for the fail safe circuit check, it checks whether the mute functions correctly when the pulse ERR-DETECT is interrupted.

PortableGrand

DGX-650B/DGX-650WH

PARTS LIST

■ CONTENTS

Note) DESTINATION ABBREVIATIONS

A:	Australian model	O:	Chinese model
B:	British model	Q:	South-east Asia model
C:	Canadian model	T:	Taiwan model
D:	German model	U:	U.S.A. model
E:	European model	V:	General export model (110V)
F:	French model	W:	General export model (220V)
H:	North European model	N,X:	General export model
I:	Indonesian model	Y:	Export model
J:	Japanese model	K:	Korean model
M:	South African model	P:	Brazilian model

■ WARNING

Components having special characteristics are marked ⚠ and must be replaced with parts having specifications equal to those originally installed.

- ■ The numbers in “QTY” shows quantities for each unit.
- ■ The parts with “--” in “Part No.” are not available as spare parts.
- ■ This mark “ } ” in the REMARKS column means these parts are interchangeable.
- ■ The second letter of the shaded ( ) part number is I, not one.
- ■ The second letter of the shaded ( ) part number is O, not zero.

■ OVERALL ASSEMBLY

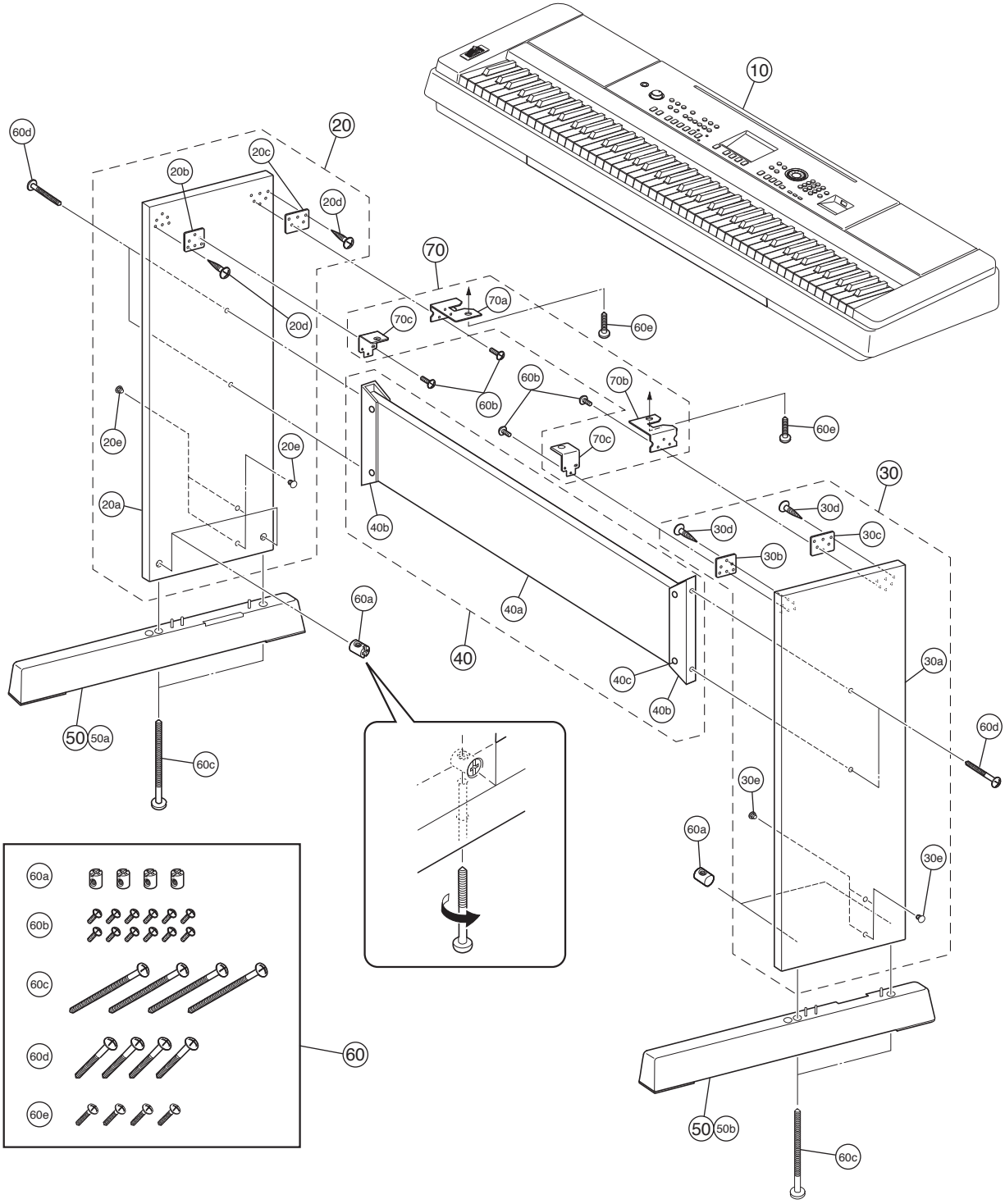

Music Rest

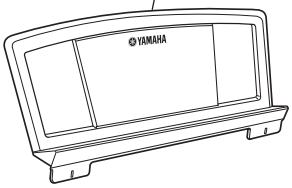

Foot Pedal (See page 12.)

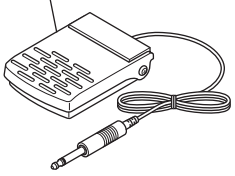

AC Adaptor

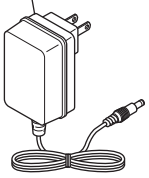

	REF NO.	PART NO.	DESCRIPTION		部品名	REMARKS	QTY	RANK
			OVERALL ASSEMBLY		総組立	DGX-650B/DGX-650WH		
	10	--	MAIN UNIT		メインユニット	DGX-650B (ZF00830)		
	10	--	MAIN UNIT		メインユニット	DGX-650WH (ZF00840)		
*	20	**ZF493900**	SIDE BOARD L ASSEMBLY		側板L Ass'y	DGX-650B		
*	20	**ZF494100**	SIDE BOARD L ASSEMBLY		側板L Ass'y	DGX-650WH		
	20a	--	SIDE BOARD L		側板L	DGX-650B (ZF35310)		
	20a	--	SIDE BOARD L		側板L	DGX-650WH (ZF35320)		
	20b	--	SIDE BOARD PLATE F	2.0 PAINT BL	側板金具F	DGX-650B (ZF38310)		
	20b	--	SIDE BOARD PLATE F	2.0 PAINT SILVER	側板金具F	DGX-650WH (ZF38330)		
	20c	--	SIDE BOARD PLATE R	2.0 PAINT BL	側板金具R	DGX-650B (ZF38320)		
	20c	--	SIDE BOARD PLATE R	2.0 PAINT SILVER	側板金具R	DGX-650WH (ZF38340)		
	20d	**WE95510R**	BIND HEAD TAPPING SCREW-1	3.5X16 MFZN2B3	TP#1+BIND	DGX-650B	6	01
	20d	**WE97070R**	BIND HEAD TAPPING SCREW-1	3.5X16 MFZN2W3	TP#1+BIND	DGX-650WH	6	01
	20e	**WK844500**	CAP BLACK		キャップブラック	DGX-650B	4	01
	20e	**WK844400**	CAP GRAY		キャップグレー	DGX-650WH	4	01
*	30	**ZF494000**	SIDE BOARD R ASSEMBLY		側板R Ass'y	DGX-650B		
*	30	**ZF494200**	SIDE BOARD R ASSEMBLY		側板R Ass'y	DGX-650WH		
	30a	--	SIDE BOARD R		側板R	DGX-650B (ZF35330)		
	30a	--	SIDE BOARD R		側板R	DGX-650WH (ZF35340)		
	30b	--	SIDE BOARD PLATE F	2.0 PAINT BL	側板金具F	DGX-650B (ZF38310)		
	30b	--	SIDE BOARD PLATE F	2.0 PAINT SILVER	側板金具F	DGX-650WH (ZF38330)		
	30c	--	SIDE BOARD PLATE R	2.0 PAINT BL	側板金具R	DGX-650B (ZF38320)		
	30c	--	SIDE BOARD PLATE R	2.0 PAINT SILVER	側板金具R	DGX-650WH (ZF38340)		
	30d	**WE95510R**	BIND HEAD TAPPING SCREW-1	3.5X16 MFZN2B3	TP#1+BIND	DGX-650B	6	01
	30d	**WE97070R**	BIND HEAD TAPPING SCREW-1	3.5X16 MFZN2W3	TP#1+BIND	DGX-650WH	6	01
	30e	**WK844500**	CAP BLACK		キャップブラック	DGX-650B	4	01
	30e	**WK844400**	CAP GRAY		キャップグレー	DGX-650WH	4	01
*	40	**ZF494500**	STAND RAIL ASSEMBLY		框Ass'y	DGX-650B		
*	40	**ZF494600**	STAND RAIL ASSEMBLY		框Ass'y	DGX-650WH		
	40a	--	STAND RAIL		スタンド框	DGX-650B (ZF35370)		
	40a	--	STAND RAIL		スタンド框	DGX-650WH (ZF35380)		
	40b	--	ANGLE BRACKET		框補強金具	DGX-650B (WA69460)	2	
	40b	--	ANGLE BRACKET		框補強金具	DGX-650WH (WA69480)	2	
	40c	**WE95510R**	BIND HEAD TAPPING SCREW-1	3.5X16 MFZN2B3	TP#1+BIND	DGX-650B	8	01
	40c	**WE97070R**	BIND HEAD TAPPING SCREW-1	3.5X16 MFZN2W3	TP#1+BIND	DGX-650WH	8	01
	50	**WT984310**	TOE BLOCK BAG UP		妻土台袋入	DGX-650B		
*	50	**ZF494900**	TOE BLOCK BAG UP		妻土台袋入	DGX-650WH		
	50a	--	TOE BLOCK L		妻土台L	DGX-650B (WT78830)		
	50a	--	TOE BLOCK L		妻土台L	DGX-650WH (ZF10540)		
	50b	--	TOE BLOCK R		妻土台R	DGX-650B (WT78840)		
	50b	--	TOE BLOCK R		妻土台R	DGX-650WH (ZF10550)		
*	60	**ZF495200**	SCREW SET	BLACK	ネジセット	DGX-650B		
*	60	**ZF495300**	SCREW SET	SILVER	ネジセット	DGX-650WH		
	60a	--	JOINT CONNECTOR	6.0X13	ナット特殊	(WF55910)	4	
	60b	--	BIND HEAD SCREW	3.0X8 MFZN2B3	小ネジ+BIND	DGX-650B (WE98360)	12	
	60b	--	BIND HEAD SCREW	3.0X8 MFZN2W3	小ネジ+BIND	DGX-650WH (WE98720)	12	
	60c	--	TRUSS HEAD SCREW	6.0X70 MFZN2B3	特注ネジ+TRUS	(WF49230)	4	
	60d	--	TRUSS HEAD SCREW	6.0X30 MFZN2B3	特注ネジ+TRUS	DGX-650B (WH28700)	4	
	60d	--	TRUSS HEAD SCREW	6.0X30 MFZN2W3	特注ネジ+TRUS	DGX-650WH (WF05290)	4	
	60e	--	TRUSS HEAD SCREW	5.0X16 MFZN2W3	小ネジ+TRUS	(WF49240)	4	
*	70	**ZF501100**	STAY SET	BLACK	金具セット	DGX-650B		
*	70	**ZF501200**	STAY SET	SILVER	金具セット	DGX-650WH		
	70a	--	ST CATCH ANGLE L	2.0 L PAINT BL	ST受け金具L	DGX-650B (ZF38220)		
	70a	--	ST CATCH ANGLE L	2.0 L PAINT SIL	ST受け金具L	DGX-650WH (ZF38240)		
	70b	--	ST CATCH ANGLE R	2.0 R PAINT BL	ST受け金具R	DGX-650B (ZF38230)		
	70b	--	ST CATCH ANGLE R	2.0 R PAINT SIL	ST受け金具R	DGX-650WH (ZF38250)		
	70c	--	STAND ANGLE	2.0 L PAINT BL	スタンドアングル	DGX-650B (ZF38100)	2	
	70c	--	STAND ANGLE	2.0 L PAINT SIL	スタンドアングル	DGX-650WH (ZF38110)	2	
			ACCESSORIES		付属品	DGX-650B/DGX-650WH		
*		**ZF451800**	MUSIC REST WITH BAG	BLACK	譜面板袋入り	DGX-650B		
*		**ZF451900**	MUSIC REST WITH BAG	WHITE	譜面板袋入り	DGX-650WH		
		WU089600	FOOT PEDAL		フットペダル			10
⚠		**WK014700**	AC ADAPTOR	PA-150U U	ACアダプター	U,C		08
⚠		**WR527000**	AC ADAPTOR	PA-150A E	ACアダプター	E,I		10
⚠		**WR527100**	AC ADAPTOR	PA-150A B	ACアダプター	B		11
⚠		**WR527200**	AC ADAPTOR	PA-150A CHN	ACアダプター	DGX-650B O		
⚠		**WU356400**	AC ADOPTOR	PA-150A K	ACアダプター	K		08
*		**ZF498400**	CHINESE SHEET SET	BLACK	中文シート袋入り	DGX-650B O		

* : New Parts

RANK : Japan only

■ MAIN UNIT

• Bottom view 1

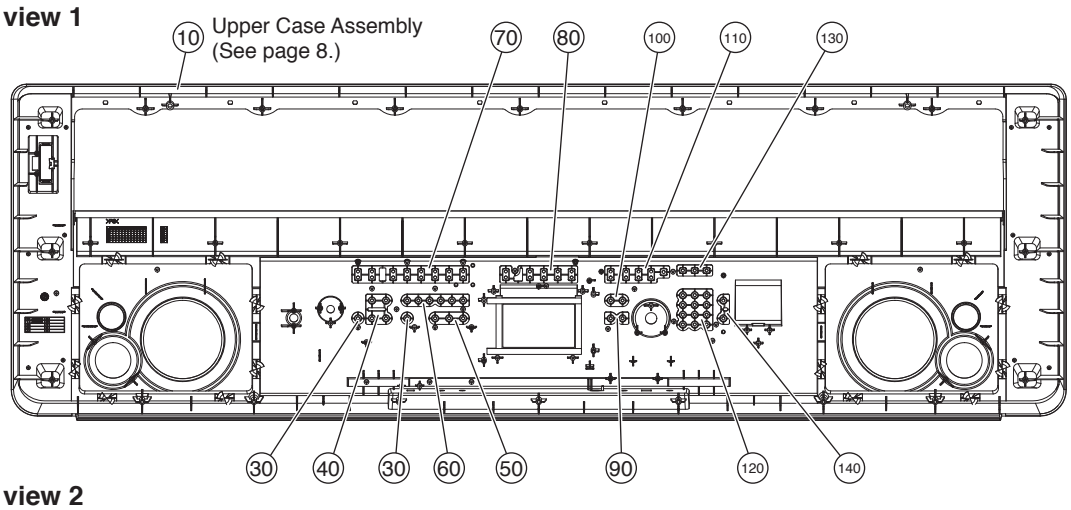

• Bottom view 2

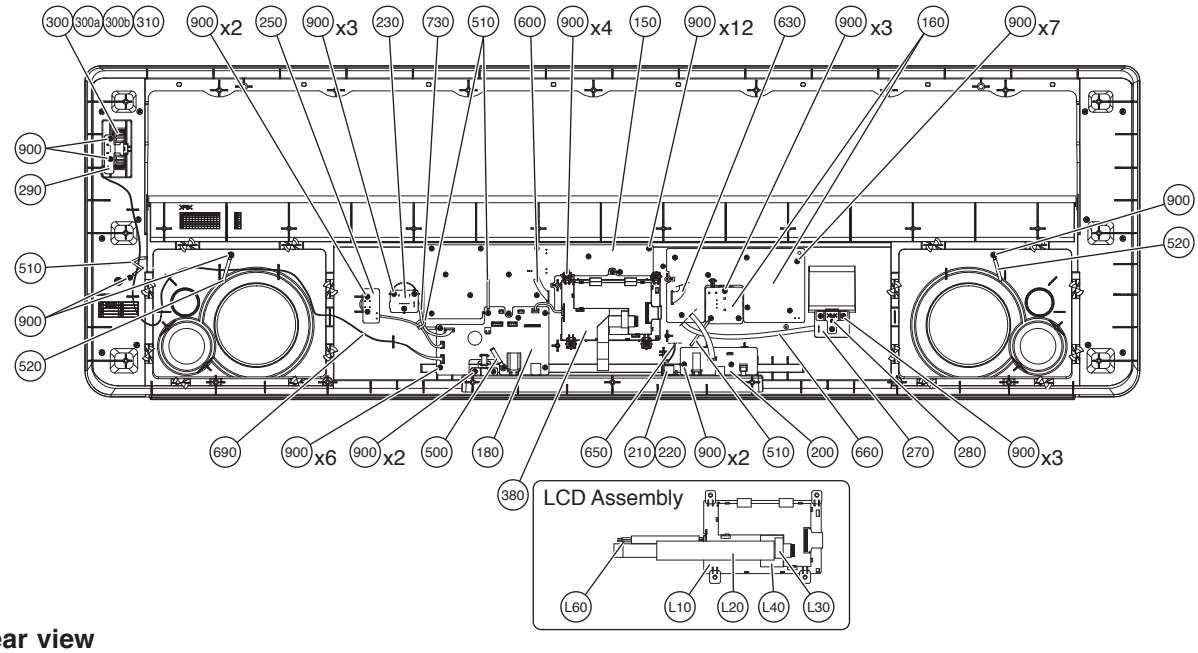

• Rear view

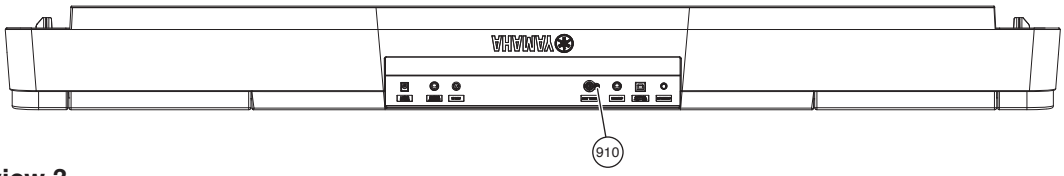

• Bottom view 3

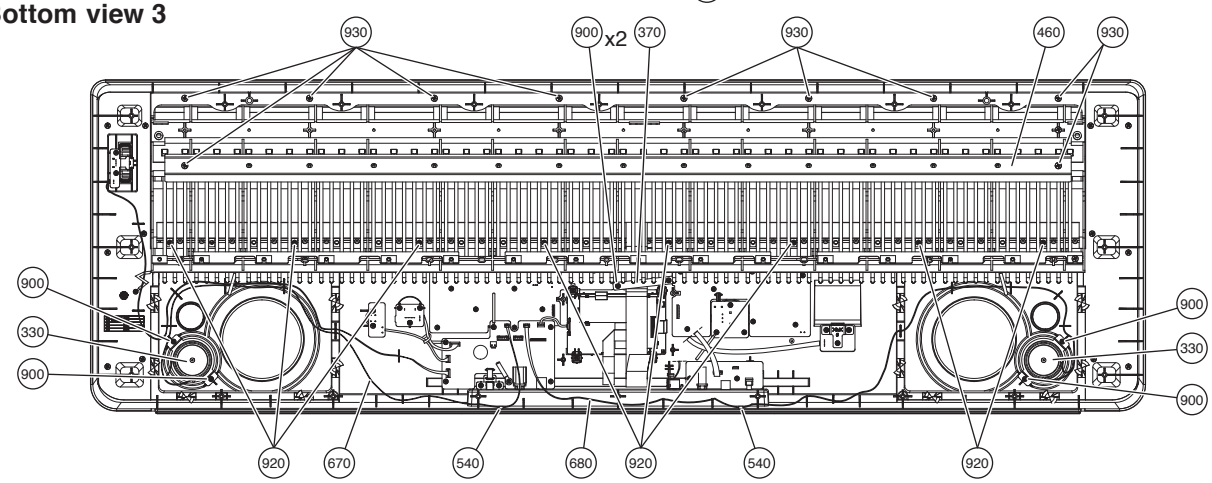

- **Bottom view 4**

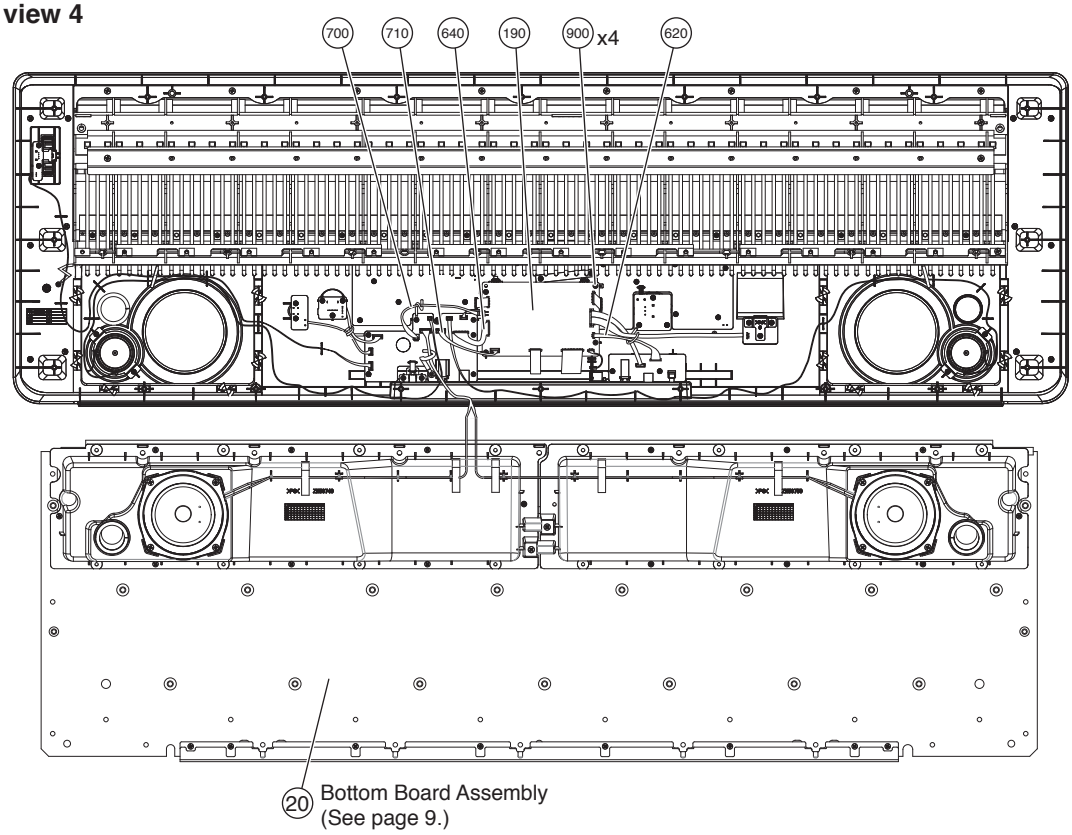

- **Bottom view 5**

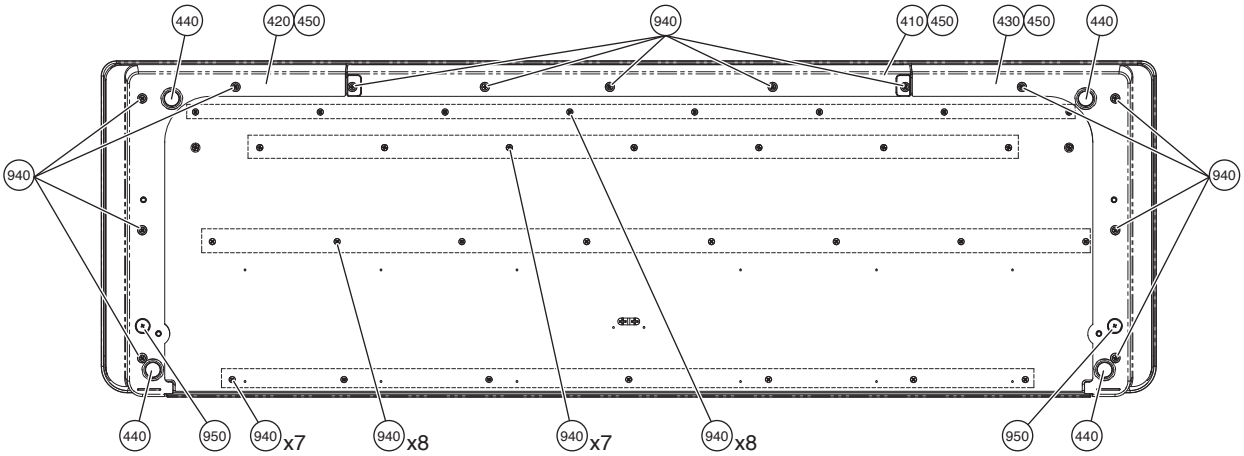

- **Top view**

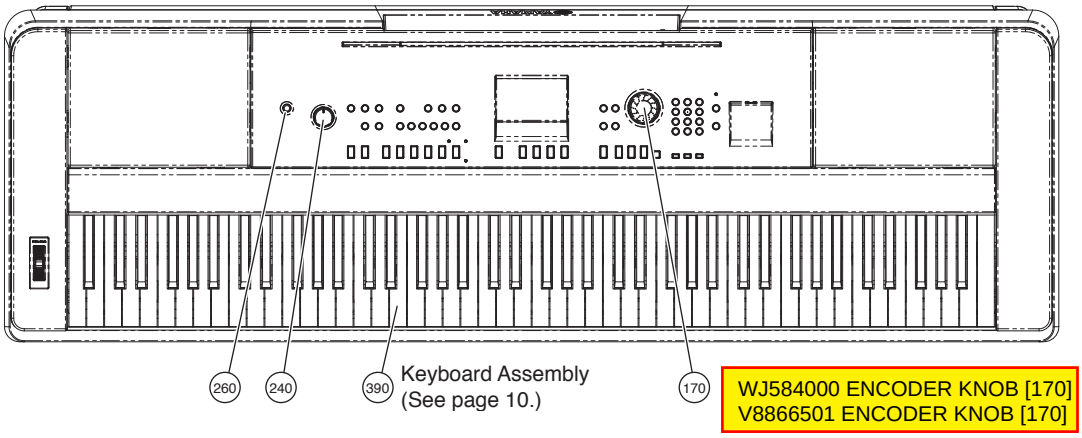

	REF NO.	PART NO.	DESCRIPTION		部品名	REMARKS	QTY	RANK
			MAIN UNIT		メインユニット	DGX-650B/DGX-650WH		
		--	MAIN UNIT		メインユニット	DGX-650B (ZF00830)		
		--	MAIN UNIT		メインユニット	DGX-650WH (ZF00840)		
*	10	ZF008500	UPPER CASE ASSEMBLY		上ケースAss'y	DGX-650B		
*	10	ZF008600	UPPER CASE ASSEMBLY		上ケースAss'y	DGX-650WH		
*	20	ZF009000	BOTTOM BOARD ASSEMBLY		底板Ass'y			
*	30	ZF009200	PN_SWITCH A		PNスイッチA	DEMO/BGM,REC	2	
*	40	ZF009300	PN_SWITCH B		PNスイッチB	SCORE,LYRICS,SMART CHORD, STYLE RECOMMENDER		
*	50	ZF009400	PN_SWITCH C		PNスイッチC	WAITING,YOUR TEMPO, MINUS ONE		
*	60	ZF010500	PN_SWITCH D PRINTED		PNスイッチD印刷品	R/1,L/2,3,4,5,A		
*	70	ZF009600	PN_SWITCH E		PNスイッチE	METRONOME ON/OFF, TEMPO/TAP,REPEAT&LEARN, A-B REPEAT,REW,FF,PAUSE,		
*	80	ZF009700	PN_SWITCH F		PNスイッチF	START/STOP REGIST MEMORY BANK,1-4		
*	90	ZF010600	PN_SWITCH G PRINTED		PNスイッチG印刷品	CATEGORY(<<,>>)		
*	100	ZF009900	PN_SWITCH H		PNスイッチH	EXIT,EXECUTE		
*	110	ZF010000	PN_SWITCH I		PNスイッチI	PORTABLE GRAND, SONG/AUDIO,STYLE,VOICE, MUSIC DATABASE		
*	120	ZF010700	PN_SWITCH J PRINTED		PNスイッチJ印刷品	0-9,-/NO,+/YES		
*	130	ZF010200	PN_SWITCH K		PNスイッチK	SPLIT ON/OFF,DUAL ON/OFF, HARMONY ON/OFF		
*	140	ZF010300	PN_SWITCH L		PNスイッチL	FILE CONTROL,FUNCTION		
*	150	ZE901500	CIRCUIT BOARD	PNL	PNLシート			
*	160	ZE901700	CIRCUIT BOARD	PNR	PNRシート			
	170	WJ584000	ENCODER KNOB	BLACK	エンコーダツマミ	DGX-650B DATA ENTRY		04
	170	V8866501	ENCODER KNOB	GRAY	エンコーダツマミ	DGX-650WH DATA ENTRY		01
*	180	ZE901800	CIRCUIT BOARD	AJACK	AJACKシート			
*	190	ZE901300	CIRCUIT BOARD	DM	DMシート			
*	200	ZE901400	CIRCUIT BOARD	DJACK	DJACKシート			
*	210	ZE901900	CIRCUIT BOARD	PEDAL	PEDALシート			
	220	WT983000	NONWOVEN CLOTH		不織布			
*	230	ZE902200	CIRCUIT BOARD	MVR	MVRシート			
	240	VU43240R	V-KNOB	BLACK	Vツマミ	DGX-650B MASTER VOLUME		01
	240	V836130R	V-KNOB	GRAY	Vツマミ	DGX-650WH MASTER VOLUME		01
*	250	ZE902100	CIRCUIT BOARD	PWR	PWRシート			
	260	V715120R	PUSH KNOB BLACK		プッシュツマミクロ	STANDBY/ON		01
*	270	ZE902000	CIRCUIT BOARD	USB	USBシート			
	280	WT788700	BRACKET		ブラケット			
*	290	ZE902800	CIRCUIT BOARD	PB	PBシート			
	300	VY79310R	WHEEL ASSEMBLY		ホイールAss'y			04
	300a	--	WHEEL		ホイール	PITCH BEND (VY75080)		
	300b	--	SPRING		ホイールバネ	(VT44010)		
	310	--	GREASE PK G31KA (1KG)	G-31KA	グリス	(VE96850)		
*	330	YF221A00	LOUD SPEAKER	5.0cm 6ohm 10W	スピーカ	Tweeter	2	
	370	--	CIRCUIT BOARD	MKO	MKOシート	(ZE90270)		
	380	--	LCD ASSEMBLY		液晶Ass'y	(WT98310)		
*	390	ZC589700	GHL KEYBOARD TEXTURE	A88 K6	GHL鍵盤黒シボD			
	410	ZG884900	LOWER CASE F MOLDING		下ケースF成形品	DGX-650B		04
*	410	ZG914600	LOWER CASE F MOLDING		下ケースF成形品	DGX-650WH		
*	420	ZF013900	LOWER CASE L MOLDING		下ケースL成形品	DGX-650B		
*	420	ZF014000	LOWER CASE L MOLDING		下ケースL成形品	DGX-650WH		
*	430	ZF014100	LOWER CASE R MOLDING		下ケースR成形品	DGX-650B		
*	430	ZF014200	LOWER CASE R MOLDING		下ケースR成形品	DGX-650WH		
	440	V928180R	FOOT	T1.6	ゴム脚		4	01
	450	WT983300	CUSHION	730X17X2	クッション		3	
	460	--	REINFORCING PLATE	2.0	補強金具	(WU17490)		
	500	--	CLIP, WIRE		束線止め	(CB81751)		
	510	--	CORD BINDER	S-72B	束線止め	(WD79640)	4	
	520	--	CORD CLAMPER		束線止め	(CB83620)	2	
	540	--	FILAMENT TAPE	12X50	粘着テープ	(VA12610)	2	
*	600	ZF629300	FFC CABLE	12P 80MM P=1.0	FFCケーブル			
	620	ZF509100	FFC CABLE	DJK 5P 130MM P=1.0	DJK束線			
*	630	ZF629400	FFC CABLE	15P 90MM P=1.0	FFCケーブル			
*	640	ZF629600	FFC CABLE	18P 90MM P=1.0	FFCケーブル			
	650	ZF508900	FFC CABLE	PDN 5P 90MM P=1.0	PDN束線			
	660	--	CONNECTOR ASSEMBLY	USB	USB束線	(ZF86850)		

* : New Parts

RANK : Japan only

REF NO.	PART NO.	DESCRIPTION		部品名	REMARKS	QTY	RANK
670	--	CONNECTOR ASSEMBLY	TWL	TWL束線	(ZF51040)		
680	--	CONNECTOR ASSEMBLY	TWR	TWR束線	(ZF51050)		
690	--	WIRING ASSEMBLY	PTB	PTB束線	(ZF51080)		
700	--	CONNECTOR ASSEMBLY	PWR	PWR束線	(ZF51010)		
710	--	CONNECTOR ASSEMBLY	SPB	SPB束線	(ZF51020)		
730	--	WIRING ASSEMBLY	MVR	MVR束線	(ZF51070)		
900	**WE774300**	BIND HEAD B-TIGHT SCREW	3.0X8 MFZN2W3	Bタイト＋BIND		59	
910	--	BIND HEAD SCREW	3.0X8 MFZN2B3	小ネジ＋BIND	(WE98360)		
920	**WF47340R**	BIND HEAD TAPPING SCREW-B	3.0X25 MFZN2W3	Bタイト＋BIND		8	01
930	**WE98120R**	BIND HEAD TAPPING SCREW-B	4.0X12 MFZN2W3	Bタイト＋BIND		10	01
940	**WJ011400**	BIND HEAD TAPPING SCREW-B	4.0X25 MFZN2W3	Bタイト＋BIND		43	01
950	**WF74240R**	GUIDE SCREW	6.0X20. 3-14	ガイドスクリュー		2	02
	--	LCD ASSEMBLY		液晶Ass'y	(WT98310)		
L10	**WU967500**	LCD UNIT		液晶ユニット			17
L20	**WN969700**	SPONGE		防振スポンジ			01
L30	**WH376400**	FERRITE CORE	FSRC222090RX000T	フェライトコア			01
L40	--	ADHESSIVE TAPE	#500 25X35	両面粘着テープ	(WP10900)		
L60	--	WIRING ASSEMBLY	BL 2P	BL束線	(WB09210)		01

∗ : New Parts

RANK : Japan only

■ UPPER CASE ASSEMBLY

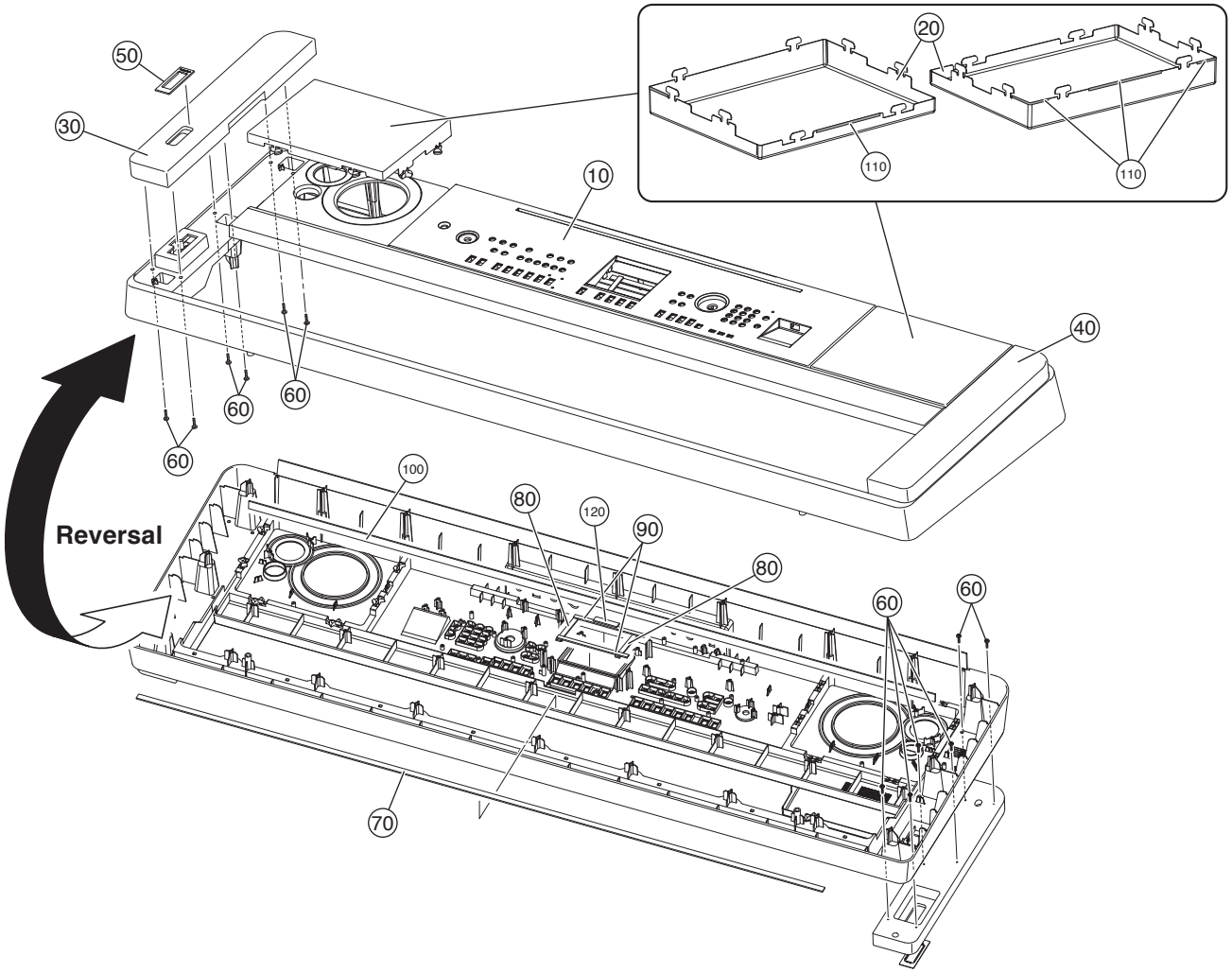

	REF NO.	PART NO.	DESCRIPTION		部品名	REMARKS	QTY	RANK
			UPPER CASE ASSEMBLY		上ケースAss'y	DGX-650B/DGX-650WH		
*		**ZF008500**	UPPER CASE ASSEMBLY		上ケースAss'y	DGX-650B		
*		**ZF008600**	UPPER CASE ASSEMBLY		上ケースAss'y	DGX-650WH		
	10	**--**	UPPER CASE PRINTED	BLACK	上ケース印刷品	DGX-650B (ZF01430)		
	10	**--**	UPPER CASE PRINTED	WHITE	上ケース印刷品	DGX-650WH (ZF01440)		
*	20	**ZF014500**	SP GRILLE PAINTED	BLACK	SPグリル塗装品	DGX-650B	2	
*	20	**ZF014600**	SP GRILLE PAINTED	WHITE	SPグリル塗装品	DGX-650WH	2	
*	30	**ZF014700**	KEY BLOCK L		拍子木L	DGX-650B		
*	30	**ZF014800**	KEY BLOCK L		拍子木L	DGX-650WH		
*	40	**ZF014900**	KEY BLOCK R		拍子木R	DGX-650B		
*	40	**ZF015000**	KEY BLOCK R		拍子木R	DGX-650WH		
	50	**--**	PB ESCUTCHEON_ASSEMBLY	BLACK	PBエスカAss'y	DGX-650B (ZF01510)		
	50	**--**	PB ESCUTCHEON_ASSEMBLY	WHITE	PBエスカAss'y	DGX-650WH (ZF01520)		
	60	**WE95460R**	BIND HEAD TAPPING SCREW-1	3.5X14 MFZN2W3	TP#1+BIND		12	01
	70	**--**	FELT		フェルト	(ZA69300)		
	80	**--**	CUSHION(PE)	80X8X2	クッション(PE)	(WH39010)	2	
	90	**--**	CUSHION(PE)	125X8X2	クッション(PE)	(WH39020)	2	
	100	**--**	CUSHION	1220X15X2	クッション	(WT98140)		
	110	**--**	NONWOVEN CLOTH	30X6X0.35	不織布	(WC45050)	8	
	120	**--**	NONWOVEN CLOTH	28X10X0.55	不織布	(WD26380)		

* : New Parts

RANK : Japan only

■ BOTTOM BOARD ASSEMBLY

• Top view 1

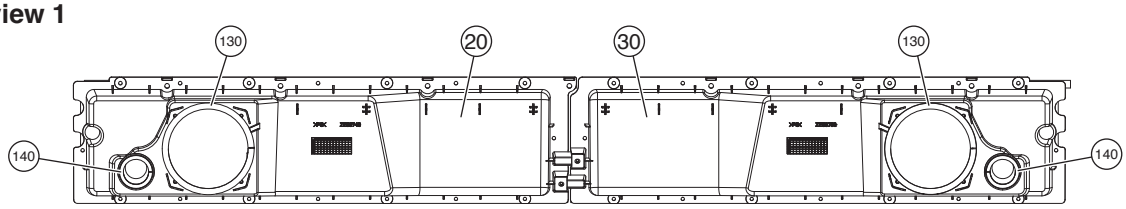

• Bottom view

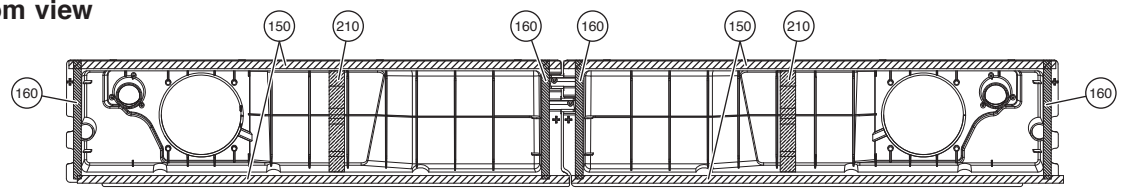

• Top view 2

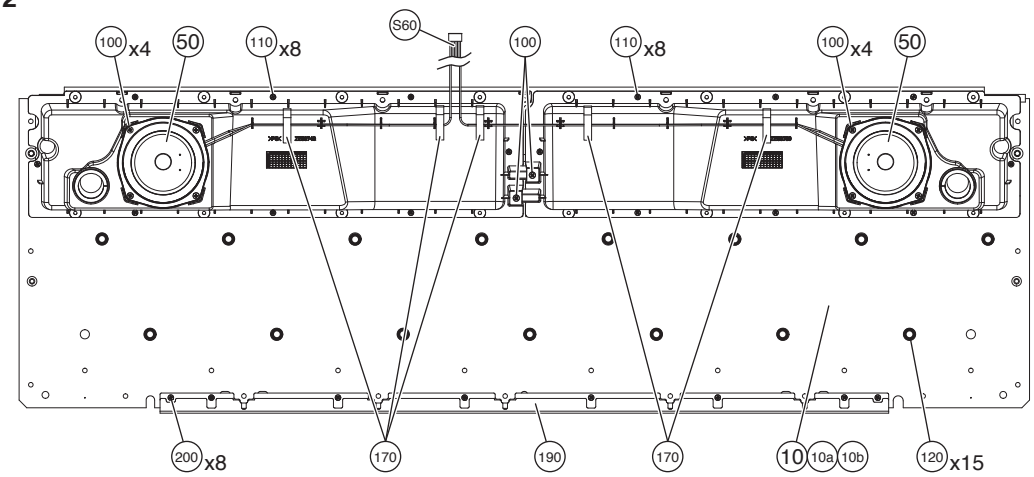

REF NO.	PART NO.	DESCRIPTION		部品名	REMARKS	QTY	RANK
		BOTTOM BOARD ASSEMBLY		底板Ａｓｓ，ｙ	DGX-650B/DGX-650WH		
*	**ZF009000**	BOTTOM BOARD ASSEMBLY		底板Ａｓｓ，ｙ			
10	--	BOTTOM SUB ASSEMBLY		底板木部集成	(ZF01530)		
10a	--	NUT	6.0X12.5B MFZN2W3	ナットオニメ	(WF58240)	2	
10b	--	NUT	B 5.0X12 MFZN2W3	ナットオニメ	(WF73830)	4	
20	--	SPEAKER BOX L		スピーカーボックスＬ	(ZE59740)		
30	--	SPEAKER BOX R		スピーカーボックスＲ	(ZE59750)		
* 50	**YF014A00**	LOUD SPEAKER	12.0cm 4 ohm 10W	スピーカー	Woofer	2	
S60	--	CONNECTOR ASSEMBLY	SPA	ＳＰＡ束線	(ZF51030)		
100	**WE99860R**	BIND HEAD TAPPING SCREW-B	4.0X12 MFZN2B3	Ｂタイト＋ＢＩＮＤ		10	01
110	**WE95460R**	BIND HEAD TAPPING SCREW-1	3.5X14 MFZN2W3	ＴＰ＃１＋ＢＩＮＤ		16	01
120	--	SPACER		スペーサ	(WU17530)	15	
130	--	CUSHION(PE)	PEFU 360X5XT2	クッション（ＰＥ）	(WF26940)	2	
140	--	CUSHION	130X5X5	クッション	(WU17520)	2	
150	--	CUSHION(PE)	642X10X1	クッション（ＰＥ）	(WT98180)	4	
160	--	CUSHION(PE)	160X10X1	クッション（ＰＥ）	(WT98190)	4	
170	--	FILAMENT TAPE	12X50	粘着テープ	(VA12610)	5	
190	--	SUPPORT FRONT RAIL	2.0	サポート金具	(ZA39270)		
200	**WE97090R**	BIND HEAD TAPPING SCREW-1	3.5X12 MFZN2W3	ＴＰ＃１＋ＢＩＮＤ		8	01
210	--	SPONGE	CALMFLEX F-2	吸音スポンジ	(ZG15180)	2	

* : New Parts

RANK : Japan only

■ KEYBOARD ASSEMBLY

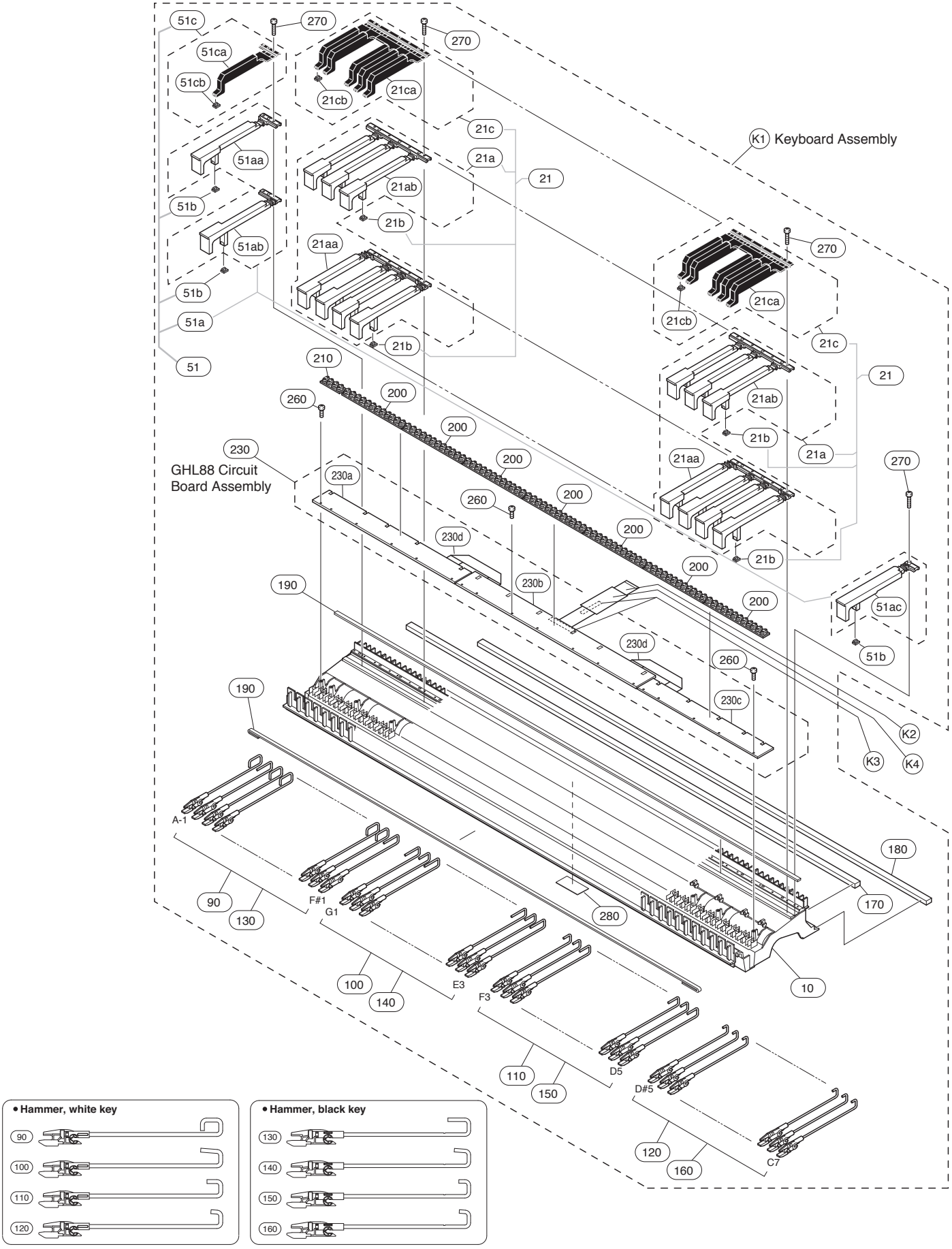

REF NO.	PART NO.	DESCRIPTION		部品名	REMARKS	QTY	RANK
		KEYBOARD ASSEMBLY		ＧＨＬ鍵盤Ａｓｓ’ｙ	DGX-650B/DGX-650WH		
*	**ZC589700**	GHL KEYBOARD TEXTURE		ＧＨＬ鍵盤黒シボＤ			
K1	**--**	GHL B TEXTURE ASSEMBLY		ＧＨＬ黒シボＡｓｓ’ｙ	(WM95930)		
K2	**MFA27350**	FLEXIBLE FLAT CABLE	27P L=350 P=1.0	カード電線			
K2	**WT973500**	FLEXIBLE FLAT CABLE	27P L=350 P=1.0	カード電線			04
K3	**--**	FILAMENT TAPE	12X60	粘着テープ	(VM72270)	2	
K3	**--**	FILAMENT TAPE	12X50	フィラメントテープ	(WM77590)	2	
K4	**--**	SPONGE13		防振スポンジ１３	(WK89530)		
	--	GHL B TEXTURE ASSEMBLY		ＧＨＬ黒シボＡｓｓ’ｙ	(WM95930)		
10	**--**	KEYBOARD FRAME GHL		フレーム８８改	(WJ02700)		
21	**--**	WHITE KEY OCT ASSEMBLY		白鍵ＯＣＴ Ａｓｓ’ｙ	(WN53600)	7	
21a	**--**	WHITE KEY OCT SUB		白鍵ＯＣＴサブＡｓｓ’ｙ	(WN53620)		
21aa	**WJ029600**	WHITE KEYS	CEGB	白鍵ＣＥＧＢ改			03
21ab	**WJ029700**	WHITE KEYS	DFA	白鍵ＤＦＡ改			03
21b	**WG43760R**	ACTUATE RUBBER	GHL	駆動ラバー		7	01
21b	**WN742300**	ACTUATE RUBBER	GHL	駆動ラバー		7	01
21c	**WN045200**	B KEY TEXTURE ASSEMBLY		黒鍵シボＡｓｓ’ｙ			05
21ca	**--**	BLACK KEY TEXTURE		黒鍵シボ	(WM81240)		
21cb	**WG43760R**	ACTUATE RUBBER	GHL	駆動ラバー		5	01
21cb	**WN742300**	ACTUATE RUBBER	GHL	駆動ラバー		5	01
51	**--**	WHITE KEY DASH ASSEMBLY		白鍵ダッシュＡｓｓ’ｙ	(WN53610)		
51a	**--**	WHITE KEY DASH SUB		白鍵ダッシュサブＡｓｓ’ｙ	(WN53640)		
51aa	**WJ029900**	WHITE KEY	A'	白鍵Ａ改			01
51ab	**WJ030000**	WHITE KEY	B'	白鍵Ｂ改			01
51ac	**WJ030100**	WHITE KEY	C'	白鍵Ｃ改			02
51b	**WG43760R**	ACTUATE RUBBER	GHL	駆動ラバー		3	01
51b	**WN742300**	ACTUATE RUBBER	GHL	駆動ラバー		3	01
51c	**WN045300**	A# B KEY TEXTUR		Ａ＃黒鍵シボＡｓｓ’ｙ			03
51ca	**--**	BLACK KEY TEXTURE	A#	黒鍵シボＡ＃	(WN04510)		
51cb	**WG43760R**	ACTUATE RUBBER	GHL	駆動ラバー			01
51cb	**WN742300**	ACTUATE RUBBER	GHL	駆動ラバー			01
90	**WF15140R**	HAMMER ASSEMBLY, WHITE KEY	W1	ハンマーＷ１		13	02
100	**WF15150R**	HAMMER ASSEMBLY, WHITE KEY	W2	ハンマーＷ２		13	02
110	**WF15160R**	HAMMER ASSEMBLY, WHITE KEY	W3	ハンマーＷ３		13	02
120	**WF15170R**	HAMMER ASSEMBLY, WHITE KEY	W4	ハンマーＷ４		13	02
130	**WF15180R**	HAMMER ASSEMBLY, BLACK KEY	B1	ハンマーＢ１		9	02
140	**WF15190R**	HAMMER ASSEMBLY, BLACK KEY	B2	ハンマーＢ２		9	02
150	**WF15200R**	HAMMER ASSEMBLY, BLACK KEY	B3	ハンマーＢ３		9	02
160	**WF15210R**	HAMMER ASSEMBLY, BLACK KEY	B4	ハンマーＢ４		9	02
170	**WF21200R**	STOPPER U88		ストッパーＵ８８			07
180	**WK688700**	STOPPER L88		ストッパーＬ８８			07
190	**WF211900**	LIMIT STOPPER		リミットストッパー			02
200	**WF212202**	RUBBER CONTACT	GHL OCT 2M	接点ゴムＯＣＴ	C#0-C1,C#1-C2,C#2-C3, C#3-C4,C#4-C5,C#5-C6, C#6-C7	7	05
210	**WF212402**	RUBBER CONTACT	GHL A-C 2M	接点ゴムＡ－Ｃ	A-1-C0		05
230	**WG317500**	CIRCUIT BOARD	GHL88	ＧＨＬ８８シート			
230a	**WF21250R**	CIRCUIT BOARD	GHL88L	ＧＨＬ８８シートＬ			13
230b	**WF21260R**	CIRCUIT BOARD	GHL88M	ＧＨＬ８８シートＭ			13
230c	**WF21280R**	CIRCUIT BOARD	GHL88H	ＧＨＬ８８シートＨ			12
230d	**WF212900**	CONNECTOR ASSEMBLY	17P	中継束線		2	03
260	**WF267300**	BIND HEAD P-TIGHT SCREW	2.6X8 MFZN2W3	ＰタイトＢＩＮＤ		18	01
270	**WE973000**	BIND HEAD TAPPING SCREW-P	3.0X16 MFZN2W3	ＰタイトＢＩＮＤ		31	
280	**WH711300**	SPONGE GHS		防振スポンジ ＧＨＳ			
290	**WM498600**	GREASE_BLUE	G-1066Y 16KG	グリス青			

* : New Parts

RANK : Japan only

■ FOOT PEDAL

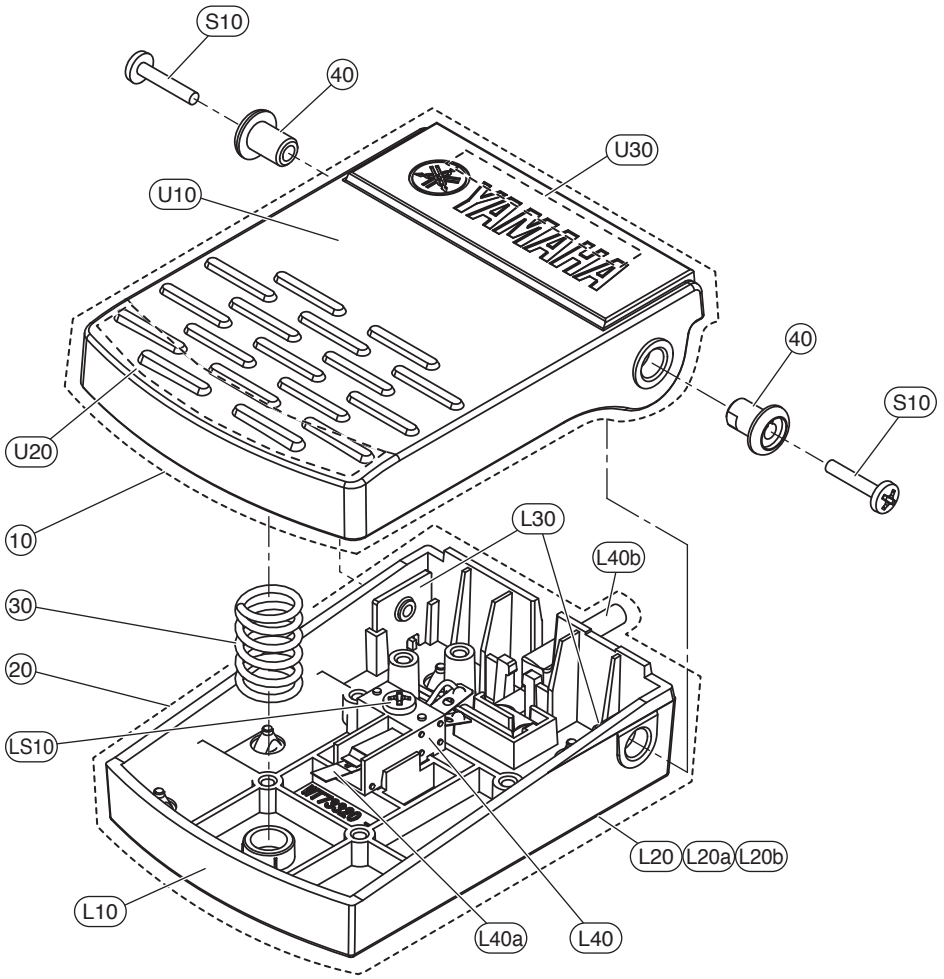

REF NO.	PART NO.	DESCRIPTION		部品名	REMARKS	QTY	RANK
		FOOT PEDAL		フットペダル	DGX-650B/DGX-650WH		
	WU089600	FOOT PEDAL		フットペダル			10
	WT733000	PEDAL FINAL ASSEMBLY		ペダル総組立			10
10	--	UPPER CASE ASSEMBLY		上ケースAss'y	(WT75570)		
20	--	LOWER CASE ASSEMBLY		下ケースAss'y	(WT75580)		
30	--	PEDAL SPRING	CHROME PLATING(3)	ペダルばね	(WT97780)		
40	--	SHAFT BUSH		回転軸ブッシュ	(WT97820)	2	
S10	**WF303500**	BIND HEAD SCREW	3.0X14 MFZN2B3	小ネジ＋BIND		2	
	--	UPPER CASE ASSEMBLY		上ケースAss'y	(WT75570)		
U10	--	UPPER CASE		上ケース	(WT73310)		
U20	--	PEDAL FELT(1)	68 9 WITH ADHESIVE	ペダルフェルト（1）	(WT97790)		
U30	--	PEDAL FELT(2)	55 8 WITH ADHESIVE	ペダルフェルト（2）	(WT99170)		
	--	LOWER CASE ASSEMBLY	PK	下ケースAss'y	(WT75580)		
L10	--	LOWER CASE	PEDAL	下ケース	(WT73320)		
L20	--	RUBBER SHEET ASSEMBLY		ゴム底Ass'y	(WU00640)		
L20a	--	RUBBER B0TTOM SHEET		ゴム底シート	(WT75590)		
L20b	--	ADHESIVE TAPE		粘着テープ	(WU05470)		
L30	--	FIXED ANGLE		固定金具	(WT97800)	2	
L40	--	LEAF SWITCH ASSEMBLY		リーフスイッチAss'y	(WT97810)		
L40a	**WK233100**	LEAF SWITCH	LSB-1140AU	リーフスイッチ			05
L40b	--	WIRE ASSEMBLY		ケーブル加工品	(WU01670)		
LS10	**WR901300**	BIND HEAD TAPPING SCREW-B	3.0X14 MFZN2W3	BタイトBIND			01

＊ : New Parts

RANK : Japan only

■ ELECTRICAL PARTS

AJACK,DJACK,PB,USB

	REF NO.	PART NO.	DESCRIPTION		部品名	REMARKS	QTY	RANK
			ELECTRICAL PARTS		電気部品	DGX-650B/DGX-650WH		
*		**ZE901800**	CIRCUIT BOARD	AJACK	AJACKシート	(ZE90110)(YE942C0)		
*		**ZE901400**	CIRCUIT BOARD	DJACK	DJACKシート	(ZE90110)(YE942C0)		
*		**ZE902800**	CIRCUIT BOARD	PB	PBシート	(ZE90110)(YE942C0)		
*		**ZE902000**	CIRCUIT BOARD	USB	USBシート	(ZE90110)(YE942C0)		
*		**ZE901300**	CIRCUIT BOARD	DM	DMシート	(YE941C0)		
		WF21280R	CIRCUIT BOARD	GHL88H	GHL88シートH	(WF46250)(X6246D0)		12
		WF21250R	CIRCUIT BOARD	GHL88L	GHL88シートL	(WF46230)(X6244D0)		13
		WF21260R	CIRCUIT BOARD	GHL88M	GHL88シートM	(WF46240)(X6245G0)		13
		--	CIRCUIT BOARD	MKO	MKOシート	(ZE90270)(ZE90120)		
						(YE943B0)		
*		**ZE902200**	CIRCUIT BOARD	MVR	MVRシート	(ZE90120)(YE943B0)		
*		**ZE901900**	CIRCUIT BOARD	PEDAL	PEDALシート	(ZE90120)(YE943B0)		
*		**ZE901500**	CIRCUIT BOARD	PNL	PNLシート	(ZE90120)(YE943B0)		
*		**ZE901700**	CIRCUIT BOARD	PNR	PNRシート	(ZE90120)(YE943B0)		
*		**ZE902100**	CIRCUIT BOARD	PWR	PWRシート	(ZE90120)(YE943B0)		
*		**ZE901800**	CIRCUIT BOARD	AJACK	AJACKシート	(ZE90110)(YE942C0)		
*		**ZE901400**	CIRCUIT BOARD	DJACK	DJACKシート	(ZE90110)(YE942C0)		
*		**ZE902800**	CIRCUIT BOARD	PB	PBシート	(ZE90110)(YE942C0)		
*		**ZE902000**	CIRCUIT BOARD	USB	USBシート	(ZE90110)(YE942C0)		
	70	**WQ778800**	FUSE HOLDER	PIN TP00526-31	ヒューズホルダ			01
	80	**--**	NONWOVENS	35_3	不織布	(WC45010)	2	
	90	**--**	NONWOVEN FABRIC	50X3X0.35	不織布	(WH21960)		
	C544	**UR749470**	ELECTROLYTIC CAPACITOR	4700 25.0V FORM.	ケミコン			
	CN101	**VK024600**	CONNECTOR	52147 2P TE	ワイヤートラップ			
	CN103	**VK024700**	CONNECTOR	52147 3P TE	ワイヤートラップ			
	CN401	**VK024700**	CONNECTOR	52147 3P TE	ワイヤートラップ			
	CN402	**WA521800**	CONNECTOR	52806 18P TE	FFCコネクタ			
	CN403	**VK024800**	CONNECTOR	52147 4P TE	ワイヤートラップ			
	CN407	**VI878200**	CONNECTOR	51048 4P TE	ケーブルホルダー			
	CN408	**VI878200**	CONNECTOR	51048 4P TE	ケーブルホルダー			
	CN409	**VB390100**	CONNECTOR	PH 5P TE	ベースポスト			
	CN410	**WA780300**	CONNECTOR	52806 5P TE	FFCコネクタ			
	CN411	**VB858400**	CONNECTOR	PH 5P SE	ベースポスト			
	CN415	**VL844800**	CONNECTOR	XH 4P TE	ベースツキポスト			
	CN418	**VL844900**	CONNECTOR	XH 5P TE	ベースツキポスト			
	CN419	**LB918020**	CONNECTOR	XH 2P TE	ベースツキポスト			
	CN420	**VL844700**	CONNECTOR	XH 3P TE	ベースツキポスト			
	CN422	**LB932020**	CONNECTOR	VH 2P TE	ベースポスト			
	CN423	**VK024600**	CONNECTOR	52147 2P TE	ワイヤートラップ			
⚠	D1	**WV008801**	DIODE	2A02-A0 TE- 52	ダイオード			
	FT1	**ZA675500**	FET KB-290	TJ20A10M3 SUTO	FET			
⚠	FZ1	**KB000690**	FUSE 2.5AT	T L 2.50A S	ヒューズ250V			
	J17	**--**	JUMPER CABLE	0.55 TIN	ジャンパー線	(VA07890)		
	JK201	**WJ306200**	CONNECTOR	MSJ-064-15A B AG	ホーンコネクタ	PHONES/OUTPUT		01
	JK301	**VC68750R**	CONNECTOR	JACK YKB21-5014	ホーンコネクタ(黒)	SUSTAIN		01
	JK301	**WE24520R**	CONNECTOR	JY-6314-01-020	ホーンコネクタ(黒)			
	JK302	**V6802600**	CONNECTOR	USB 4P SE	USBジャック	USB TO HOST		02
	JK303	**WK450700**	CONNECTOR	YKF45-0033N 4P SE	USBコネクタ	USB TO DEVICE		01
⚠	JK305	**WZ704400**	CONNECTOR	DC-502-AG-PBT-2.0-	電源コネクタ	DC-IN		01
	JK306	**V9280100**	CONNECTOR	JY-3535-01-070	フォーンジャックミニ	AUX IN		02
	JK306	**ZA590000**	CONNECTOR	JACK MINI STEREO	ホーンコネクタ			
*	JK306	**ZF179900**	CONNECTOR	MINI JACK HTJ-035-	ミニジャック			
	VR301	**VV04910R**	ROTARY VARIABLE RESISTOR	B 10K RK09K1110	ロータリーVR	CONTRAST		01
	VR401	**WZ510000**	ROTARY VARIABLE RESISTOR	B 10.0K RK11K1110D	ロータリーVR	PITCH BEND		02
	W1	**--**	WIRING ASSEMBLY DCC	4P L=40	DCC線材	(ZF63380)		
	C520	**US065100**	CERAMIC CAPACITOR (CHIP)	0.100 50V Z RECT.	チップセラF			
	C524	**US062100**	CERAMIC CAPACITOR (CHIP)	100P 50V J RECT.	チップセラ(SL)			
	C526	**US063100**	CERAMIC CAPACITOR (CHIP)	1000P 50V K RECT.	チップセラ(B)			
	C527	**US062100**	CERAMIC CAPACITOR (CHIP)	100P 50V J RECT.	チップセラ(SL)			
	C528	**US063100**	CERAMIC CAPACITOR (CHIP)	1000P 50V K RECT.	チップセラ(B)			
	C529	**US062470**	CERAMIC CAPACITOR (CHIP)	470P 50V J RECT.	チップセラ(SL)			
	C531	**US062100**	CERAMIC CAPACITOR (CHIP)	100P 50V J RECT.	チップセラ(SL)			
	C533	**US062470**	CERAMIC CAPACITOR (CHIP)	470P 50V J RECT.	チップセラ(SL)			
	C553	**US065100**	CERAMIC CAPACITOR (CHIP)	0.100 50V Z RECT.	チップセラF			
	C554	**US062100**	CERAMIC CAPACITOR (CHIP)	100P 50V J RECT.	チップセラ(SL)			
	C555	**US062100**	CERAMIC CAPACITOR (CHIP)	100P 50V J RECT.	チップセラ(SL)			
	C556	**US065100**	CERAMIC CAPACITOR (CHIP)	0.100 50V Z RECT.	チップセラF			
	C557	**US062820**	CERAMIC CAPACITOR (CHIP)	820P 50V K RECT.	チップセラ(B)			

* : New Parts

RANK : Japan only

AJACK,DJACK,PB,USB,DM

REF NO.	PART NO.	DESCRIPTION		部品名	REMARKS	QTY	RANK
-559	**US062820**	CERAMIC CAPACITOR (CHIP)	820P 50V K RECT.	チップセラ(B)			
IC4	**YA326A00**	IC	BA4580RF-E2 OPAMP	IC	OPAMP		01
R304	**RD356470**	CARBON RESISTOR (CHIP)	4.7K 63M J RECT.	チップ抵抗			
R305	**RD356360**	CARBON RESISTOR (CHIP)	3.6K 63M J RECT.	チップ抵抗			
R307	**RD355100**	CARBON RESISTOR (CHIP)	100.0 63M J RECT.	チップ抵抗			
R308	**RD355100**	CARBON RESISTOR (CHIP)	100.0 63M J RECT.	チップ抵抗			
R309	**RD350000**	CARBON RESISTOR (CHIP)	0 63M J RECT.	チップ抵抗			
R311	**RD358100**	CARBON RESISTOR (CHIP)	100.0K 63M J RECT.	チップ抵抗			01
R312	**RD350000**	CARBON RESISTOR (CHIP)	0 63M J RECT.	チップ抵抗			
R313	**RD356390**	CARBON RESISTOR (CHIP)	3.9K 63M J RECT.	チップ抵抗			
R314	**RD356390**	CARBON RESISTOR (CHIP)	3.9K 63M J RECT.	チップ抵抗			
R316	**RD350000**	CARBON RESISTOR (CHIP)	0 63M J RECT.	チップ抵抗			
R317	**RD358100**	CARBON RESISTOR (CHIP)	100.0K 63M J RECT.	チップ抵抗			01
R318	**RD350000**	CARBON RESISTOR (CHIP)	0 63M J RECT.	チップ抵抗			
R330	**RD356680**	CARBON RESISTOR (CHIP)	6.8K 63M J RECT.	チップ抵抗			
R332	**RD356680**	CARBON RESISTOR (CHIP)	6.8K 63M J RECT.	チップ抵抗			
R333	**RD155100**	CARBON RESISTOR (CHIP)	100.0 1/4 J TP	チップ抵抗			
-336	**RD155100**	CARBON RESISTOR (CHIP)	100.0 1/4 J TP	チップ抵抗			
C519	**UR838100**	ELECTROLYTIC CAPACITOR	100.00 16.0V RX TP	ケミコン			
C521	**UR867100**	ELECTROLYTIC CAPACITOR	10.00 50.0V RX TP	ケミコン			
C522	**UR867100**	ELECTROLYTIC CAPACITOR	10.00 50.0V RX TP	ケミコン			
C525	**UN867100**	ELECTROLYTIC CAPACITOR BP	10.00 50.0V RX TP	BPケミコン			
C532	**UN867100**	ELECTROLYTIC CAPACITOR BP	10.00 50.0V RX TP	BPケミコン			
C535	**US063220**	CERAMIC CAPACITOR (CHIP)	2200P 50V K RECT.	チップセラ(B)			
C536	**US063220**	CERAMIC CAPACITOR (CHIP)	2200P 50V K RECT.	チップセラ(B)			
C540	**US065100**	CERAMIC CAPACITOR (CHIP)	0.100 50V Z RECT.	チップセラF			
C541	**US065100**	CERAMIC CAPACITOR (CHIP)	0.100 50V Z RECT.	チップセラF			
C546	**US065100**	CERAMIC CAPACITOR (CHIP)	0.100 50V Z RECT.	チップセラF			
-548	**US065100**	CERAMIC CAPACITOR (CHIP)	0.100 50V Z RECT.	チップセラF			
C551	**UN866330**	ELECTROLYTIC CAPACITOR BP	3.30 50.0V RX TP	BPケミコン			
C552	**UN866330**	ELECTROLYTIC CAPACITOR BP	3.30 50.0V RX TP	BPケミコン			
L301	**V2993400**	COIL 20UH	R-5C TE-	チョークコイル			01
L302	**V2993400**	COIL 20UH	R-5C TE-	チョークコイル			01
L303	**GE300670**	FERRITE	BL02RN2R1P1A	フェライトビーズ			02
L305	**GE300670**	FERRITE	BL02RN2R1P1A	フェライトビーズ			02
L306	**V2993400**	COIL 20UH	R-5C TE-	チョークコイル			01
L307	**V2993400**	COIL 20UH	R-5C TE-	チョークコイル			01
⚠ L308	**ZC240800**	INDUCTOR OTHERS	UF1815SG-800Y3R0-0	ラインフィルター			01
L309	**V2993400**	COIL 20UH	R-5C TE-	チョークコイル			01
TR301	**V2797700**	TRANSISTOR	2SC5395-T112-E/F	トランジスタ 2SC			
TR301	**WC398400**	TRANSISTOR	2N5551C-AT/P	トランジスタ			01
TR302	**V2797700**	TRANSISTOR	2SC5395-T112-E/F	トランジスタ 2SC			
TR302	**WC398400**	TRANSISTOR	2N5551C-AT/P	トランジスタ			01
D2	**VB941200**	DIODE	1SS133,1SS176 TE-5	ダイオード			
D3	**VB941200**	DIODE	1SS133,1SS176 TE-5	ダイオード			
J16	**--**	JUMPER CABLE	0.55 TIN	ジャンパー線	(VA07890)		
R301	**HF456180**	CARBON RESISTOR	1.8K 1/4 J AX TP	カーボン抵抗			
R302	**HF457330**	CARBON RESISTOR	33.0K 1/4 J AX TP	カーボン抵抗			
R303	**HF456470**	CARBON RESISTOR	4.7K 1/4 J AX TP	カーボン抵抗			01
R319	**HF454100**	CARBON RESISTOR	10.0 1/4 J AX TP	カーボン抵抗			
R320	**HF454100**	CARBON RESISTOR	10.0 1/4 J AX TP	カーボン抵抗			
R323	**HF457470**	CARBON RESISTOR	47.0K 1/4 J AX TP	カーボン抵抗			
R325	**HF456330**	CARBON RESISTOR	3.3K 1/4 J AX TP	カーボン抵抗			
R327	**HF457470**	CARBON RESISTOR	47.0K 1/4 J AX TP	カーボン抵抗			
R328	**HF457180**	CARBON RESISTOR	18.0K 1/4 J AX TP	カーボン抵抗			
*	**ZE901300**	CIRCUIT BOARD	DM	DMシート	(YE941C0)		
CN012	**VL844800**	CONNECTOR	XH 4P TE	ベースツキポスト			
CN013	**LB933020**	CONNECTOR	VH 2P SE	ベースポスト			
C014	**US062100**	CERAMIC CAPACITOR (CHIP)	100P 50V J RECT.	チップセラ(SL)			
C026	**US145100**	CERAMIC CAPACITOR (CHIP)	0.1000 25V Z RECT.	チップセラ(F)			
C031	**US661470**	CERAMIC CAPACITOR (CHIP)	47P 50V J RECT.	チップセラ(CH)			01
-042	**US661470**	CERAMIC CAPACITOR (CHIP)	47P 50V J RECT.	チップセラ(CH)			01
C046	**US662100**	CERAMIC CAPACITOR (CHIP)	100P 50V J RECT.	チップセラ(CH)			
C050	**US662470**	CERAMIC CAPACITOR (CHIP)	470P 50V K RECT.	チップセラ(B)			01
-064	**US662470**	CERAMIC CAPACITOR (CHIP)	470P 50V K RECT.	チップセラ(B)			01
C072	**US625100**	CERAMIC CAPACITOR (CHIP)	0.100 10V K RECT.	チップセラ(BJ)			01
C087	**US633820**	CERAMIC CAPACITOR (CHIP)	8200P 16V K RECT.	チップセラ(B)			01
C089	**US633820**	CERAMIC CAPACITOR (CHIP)	8200P 16V K RECT.	チップセラ(B)			01
C090	**WB57250R**	POLYESTER FILM CAP. (CHIP)	0.0100 16V J RECT.	チップマイラー			01

* : New Parts

RANK : Japan only

DM

REF NO.	PART NO.	DESCRIPTION		部品名	REMARKS	QTY	RANK
C091	**WB57250R**	POLYESTER FILM CAP. (CHIP)	0.0100 16V J RECT.	チップマイラー			01
C103	**US634100**	CERAMIC CAPACITOR (CHIP)	0.010 16V K RECT.	チップセラ(B)			
C108	**US046100**	CERAMIC CAPACITOR (CHIP)	1.00 25V K RECT.	チップセラ(B)			01
C109	**US046100**	CERAMIC CAPACITOR (CHIP)	1.00 25V K RECT.	チップセラ(B)			01
C114	**US062100**	CERAMIC CAPACITOR (CHIP)	100P 50V J RECT.	チップセラ(SL)			
C115	**US062100**	CERAMIC CAPACITOR (CHIP)	100P 50V J RECT.	チップセラ(SL)			
C116	**US061470**	CERAMIC CAPACITOR (CHIP)	47P 50V J RECT.	チップセラ(CH)			
-129	**US061470**	CERAMIC CAPACITOR (CHIP)	47P 50V J RECT.	チップセラ(CH)			
C133	**US634100**	CERAMIC CAPACITOR (CHIP)	0.010 16V K RECT.	チップセラ(B)			
C135	**US625100**	CERAMIC CAPACITOR (CHIP)	0.100 10V K RECT.	チップセラ(BJ)			01
C136	**US663100**	CERAMIC CAPACITOR (CHIP)	1000P 50V K RECT.	チップセラ(B)			01
C139	**US625100**	CERAMIC CAPACITOR (CHIP)	0.100 10V K RECT.	チップセラ(BJ)			01
C155	**US625100**	CERAMIC CAPACITOR (CHIP)	0.100 10V K RECT.	チップセラ(BJ)			01
C164	**US625100**	CERAMIC CAPACITOR (CHIP)	0.100 10V K RECT.	チップセラ(BJ)			01
C168	**US625100**	CERAMIC CAPACITOR (CHIP)	0.100 10V K RECT.	チップセラ(BJ)			01
C169	**US625100**	CERAMIC CAPACITOR (CHIP)	0.100 10V K RECT.	チップセラ(BJ)			01
C172	**WG888300**	MONOLITHIC CERAMIC CAP(CHIP)	10.0 6.3V K TP	チップ積層セラコン			01
C172	**WP882000**	CERAMIC CAPACITOR (CHIP)	10U 6.3V K RECT.	チップセラ			
C173	**WG888300**	MONOLITHIC CERAMIC CAP(CHIP)	10.0 6.3V K TP	チップ積層セラコン			01
C173	**WP882000**	CERAMIC CAPACITOR (CHIP)	10U 6.3V K RECT.	チップセラ			
C174	**US625100**	CERAMIC CAPACITOR (CHIP)	0.100 10V K RECT.	チップセラ(BJ)			01
-204	**US625100**	CERAMIC CAPACITOR (CHIP)	0.100 10V K RECT.	チップセラ(BJ)			01
C206	**US625100**	CERAMIC CAPACITOR (CHIP)	0.100 10V K RECT.	チップセラ(BJ)			01
-213	**US625100**	CERAMIC CAPACITOR (CHIP)	0.100 10V K RECT.	チップセラ(BJ)			01
C218	**US625100**	CERAMIC CAPACITOR (CHIP)	0.100 10V K RECT.	チップセラ(BJ)			01
C234	**US662100**	CERAMIC CAPACITOR (CHIP)	100P 50V J RECT.	チップセラ(CH)			
-237	**US662100**	CERAMIC CAPACITOR (CHIP)	100P 50V J RECT.	チップセラ(CH)			
C241	**US625100**	CERAMIC CAPACITOR (CHIP)	0.100 10V K RECT.	チップセラ(BJ)			01
C245	**US625100**	CERAMIC CAPACITOR (CHIP)	0.100 10V K RECT.	チップセラ(BJ)			01
C248	**US625100**	CERAMIC CAPACITOR (CHIP)	0.100 10V K RECT.	チップセラ(BJ)			01
C253	**V8085400**	CERAMIC CAPACITOR (CHIP)	0.1000 25V K RECT.	チップセラ(B)			
C254	**US662220**	CERAMIC CAPACITOR (CHIP)	220P 50V K RECT.	チップセラ(B)			01
C257	**US662220**	CERAMIC CAPACITOR (CHIP)	220P 50V K RECT.	チップセラ(B)			01
C258	**US046100**	CERAMIC CAPACITOR (CHIP)	1.00 25V K RECT.	チップセラ(B)			01
C267	**US663100**	CERAMIC CAPACITOR (CHIP)	1000P 50V K RECT.	チップセラ(B)			01
C269	**US662100**	CERAMIC CAPACITOR (CHIP)	100P 50V J RECT.	チップセラ(CH)			
C274	**US662100**	CERAMIC CAPACITOR (CHIP)	100P 50V J RECT.	チップセラ(CH)			
C289	**US625100**	CERAMIC CAPACITOR (CHIP)	0.100 10V K RECT.	チップセラ(BJ)			01
C290	**US634100**	CERAMIC CAPACITOR (CHIP)	0.010 16V K RECT.	チップセラ(B)			
C291	**US663100**	CERAMIC CAPACITOR (CHIP)	1000P 50V K RECT.	チップセラ(B)			01
-293	**US663100**	CERAMIC CAPACITOR (CHIP)	1000P 50V K RECT.	チップセラ(B)			01
C296	**US663100**	CERAMIC CAPACITOR (CHIP)	1000P 50V K RECT.	チップセラ(B)			01
C297	**US634100**	CERAMIC CAPACITOR (CHIP)	0.010 16V K RECT.	チップセラ(B)			
C299	**US625100**	CERAMIC CAPACITOR (CHIP)	0.100 10V K RECT.	チップセラ(BJ)			01
C301	**US625100**	CERAMIC CAPACITOR (CHIP)	0.100 10V K RECT.	チップセラ(BJ)			01
C308	**US663100**	CERAMIC CAPACITOR (CHIP)	1000P 50V K RECT.	チップセラ(B)			01
C309	**US663100**	CERAMIC CAPACITOR (CHIP)	1000P 50V K RECT.	チップセラ(B)			01
C310	**US662470**	CERAMIC CAPACITOR (CHIP)	470P 50V K RECT.	チップセラ(B)			01
C311	**US662470**	CERAMIC CAPACITOR (CHIP)	470P 50V K RECT.	チップセラ(B)			01
C312	**US662100**	CERAMIC CAPACITOR (CHIP)	100P 50V J RECT.	チップセラ(CH)			
C313	**US662100**	CERAMIC CAPACITOR (CHIP)	100P 50V J RECT.	チップセラ(CH)			
C315	**US625100**	CERAMIC CAPACITOR (CHIP)	0.100 10V K RECT.	チップセラ(BJ)			01
IC001	**YA326A00**	IC	BA4580RF-E2 OPAMP	IC	OPAMP		01
IC002	**YD235A00**	IC	R5524N002A-TR-FE	IC	USB HIGH-SIDE POWER SW		02
* IC007	**YF284E00**	IC	MX29LV640EBTI-70G	IC	FLASH ROM 64M		
IC009	**X4463A00**	IC	SN74LV08APWR	IC	AND		
IC013	**XY806A0R**	IC	TC7WH14FU(TE12L,F)	IC	INVERTER		02
IC021	**YC967A00**	IC	MAX9820ETB+T 95MW	IC	HEADPHONE AMP		04
IC024	**X9347A00**	IC	R3112N291A-TR-FE	IC	VOLTAGE DETECTOR		01
IC025	**XY806A0R**	IC	TC7WH14FU(TE12L,F)	IC	INVERTER		02
* IC028	**YF285E00**	IC	S29GL256S90TFI020	IC	FLASH ROM 256M		
IC034	**XY806A0R**	IC	TC7WH14FU(TE12L,F)	IC	INVERTER		02
L047	**WK139000**	CHIP INDUCTANCE	600 BK1005HM601-T	チップインダクタ			01
R006	**RD350000**	CARBON RESISTOR (CHIP)	0 63M J RECT.	チップ抵抗			
R009	**RD355221**	CARBON RESISTOR (CHIP)	220.0 63M J RECT.	チップ抵抗			01
R016	**RD357100**	CARBON RESISTOR (CHIP)	10.0K 63M J RECT.	チップ抵抗			
R017	**RD357220**	CARBON RESISTOR (CHIP)	22.0K 63M J RECT.	チップ抵抗			
R027	**RD458100**	CARBON RESISTOR (CHIP)	100.0K 63M J RECT.	チップ抵抗			
R028	**RD45522R**	CARBON RESISTOR (CHIP)	220.0 63M J RECT.	チップ抵抗			01
R029	**RD45522R**	CARBON RESISTOR (CHIP)	220.0 63M J RECT.	チップ抵抗			01

* : New Parts

RANK : Japan only

DM

REF NO.	PART NO.	DESCRIPTION		部品名	REMARKS	QTY	RANK
R045	**RD454680**	CARBON RESISTOR (CHIP)	68.0 63M J RECT.	チップ抵抗			01
R046	**RD454680**	CARBON RESISTOR (CHIP)	68.0 63M J RECT.	チップ抵抗			01
R048	**RD454680**	CARBON RESISTOR (CHIP)	68.0 63M J RECT.	チップ抵抗			01
R052	**RD454680**	CARBON RESISTOR (CHIP)	68.0 63M J RECT.	チップ抵抗			01
R054	**RD458470**	CARBON RESISTOR (CHIP)	470.0K 63M J RECT.	チップ抵抗			
R056	**RD458470**	CARBON RESISTOR (CHIP)	470.0K 63M J RECT.	チップ抵抗			
R058	**RD458470**	CARBON RESISTOR (CHIP)	470.0K 63M J RECT.	チップ抵抗			
R060	**RD458470**	CARBON RESISTOR (CHIP)	470.0K 63M J RECT.	チップ抵抗			
R065	**RD454680**	CARBON RESISTOR (CHIP)	68.0 63M J RECT.	チップ抵抗			01
R067	**RD455560**	CARBON RESISTOR (CHIP)	560.0 63M J RECT.	チップ抵抗			
R068	**RD455560**	CARBON RESISTOR (CHIP)	560.0 63M J RECT.	チップ抵抗			
R073	**RD45000R**	CARBON RESISTOR (CHIP)	0.00 63M J RECT.	チップ抵抗			01
R074	**RD45000R**	CARBON RESISTOR (CHIP)	0.00 63M J RECT.	チップ抵抗			01
R076	**RD458100**	CARBON RESISTOR (CHIP)	100.0K 63M J RECT.	チップ抵抗			
R078	**RD458100**	CARBON RESISTOR (CHIP)	100.0K 63M J RECT.	チップ抵抗			
R081	**RD457330**	CARBON RESISTOR (CHIP)	33.0K 63M J RECT.	チップ抵抗			01
R082	**RD457330**	CARBON RESISTOR (CHIP)	33.0K 63M J RECT.	チップ抵抗			01
R084	**RD45747R**	CARBON RESISTOR (CHIP)	47.0K 63M J RECT.	チップ抵抗			01
R085	**RD45747R**	CARBON RESISTOR (CHIP)	47.0K 63M J RECT.	チップ抵抗			01
R091	**RD356100**	CARBON RESISTOR (CHIP)	1.0K 63M J RECT.	チップ抵抗			01
R092	**RD356100**	CARBON RESISTOR (CHIP)	1.0K 63M J RECT.	チップ抵抗			01
R097	**RD454330**	CARBON RESISTOR (CHIP)	33.0 63M J RECT.	チップ抵抗			
R098	**RD454680**	CARBON RESISTOR (CHIP)	68.0 63M J RECT.	チップ抵抗			01
R099	**RD457100**	CARBON RESISTOR (CHIP)	10.0K 63M J RECT.	チップ抵抗			
R101	**RD456100**	CARBON RESISTOR (CHIP)	1.0K 63M J RECT.	チップ抵抗			
R103	**RD454680**	CARBON RESISTOR (CHIP)	68.0 63M J RECT.	チップ抵抗			01
R104	**RD454680**	CARBON RESISTOR (CHIP)	68.0 63M J RECT.	チップ抵抗			01
R106	**RD454680**	CARBON RESISTOR (CHIP)	68.0 63M J RECT.	チップ抵抗			01
R107	**RD454680**	CARBON RESISTOR (CHIP)	68.0 63M J RECT.	チップ抵抗			01
R109	**RD454680**	CARBON RESISTOR (CHIP)	68.0 63M J RECT.	チップ抵抗			01
R113	**RD454680**	CARBON RESISTOR (CHIP)	68.0 63M J RECT.	チップ抵抗			01
R114	**RD454680**	CARBON RESISTOR (CHIP)	68.0 63M J RECT.	チップ抵抗			01
R116	**RD454680**	CARBON RESISTOR (CHIP)	68.0 63M J RECT.	チップ抵抗			01
R117	**RD457100**	CARBON RESISTOR (CHIP)	10.0K 63M J RECT.	チップ抵抗			
R118	**RD457100**	CARBON RESISTOR (CHIP)	10.0K 63M J RECT.	チップ抵抗			
R119	**RD456100**	CARBON RESISTOR (CHIP)	1.0K 63M J RECT.	チップ抵抗			
R120	**RD454680**	CARBON RESISTOR (CHIP)	68.0 63M J RECT.	チップ抵抗			01
R121	**RD454680**	CARBON RESISTOR (CHIP)	68.0 63M J RECT.	チップ抵抗			01
R128	**RD454220**	CARBON RESISTOR (CHIP)	22.0 63M J RECT.	チップ抵抗			
R129	**RD454220**	CARBON RESISTOR (CHIP)	22.0 63M J RECT.	チップ抵抗			
R132	**RD454220**	CARBON RESISTOR (CHIP)	22.0 63M J RECT.	チップ抵抗			
R134	**RD454220**	CARBON RESISTOR (CHIP)	22.0 63M J RECT.	チップ抵抗			
R138	**RD456100**	CARBON RESISTOR (CHIP)	1.0K 63M J RECT.	チップ抵抗			
R140	**RD457100**	CARBON RESISTOR (CHIP)	10.0K 63M J RECT.	チップ抵抗			
-142	**RD457100**	CARBON RESISTOR (CHIP)	10.0K 63M J RECT.	チップ抵抗			
R149	**RD457100**	CARBON RESISTOR (CHIP)	10.0K 63M J RECT.	チップ抵抗			
R152	**RD454680**	CARBON RESISTOR (CHIP)	68.0 63M J RECT.	チップ抵抗			01
-156	**RD454680**	CARBON RESISTOR (CHIP)	68.0 63M J RECT.	チップ抵抗			01
R158	**RD454680**	CARBON RESISTOR (CHIP)	68.0 63M J RECT.	チップ抵抗			01
R159	**RD456100**	CARBON RESISTOR (CHIP)	1.0K 63M J RECT.	チップ抵抗			
R160	**RD45747R**	CARBON RESISTOR (CHIP)	47.0K 63M J RECT.	チップ抵抗			01
R165	**RD457100**	CARBON RESISTOR (CHIP)	10.0K 63M J RECT.	チップ抵抗			
R166	**RD455100**	CARBON RESISTOR (CHIP)	100.0 63M J RECT.	チップ抵抗			
-169	**RD455100**	CARBON RESISTOR (CHIP)	100.0 63M J RECT.	チップ抵抗			
R171	**RD457100**	CARBON RESISTOR (CHIP)	10.0K 63M J RECT.	チップ抵抗			
-177	**RD457100**	CARBON RESISTOR (CHIP)	10.0K 63M J RECT.	チップ抵抗			
R178	**RD45000R**	CARBON RESISTOR (CHIP)	0.00 63M J RECT.	チップ抵抗			01
R183	**RD454680**	CARBON RESISTOR (CHIP)	68.0 63M J RECT.	チップ抵抗			01
R184	**RD456100**	CARBON RESISTOR (CHIP)	1.0K 63M J RECT.	チップ抵抗			
R185	**RD456100**	CARBON RESISTOR (CHIP)	1.0K 63M J RECT.	チップ抵抗			
R188	**RD457100**	CARBON RESISTOR (CHIP)	10.0K 63M J RECT.	チップ抵抗			
R197	**RD457100**	CARBON RESISTOR (CHIP)	10.0K 63M J RECT.	チップ抵抗			
-199	**RD457100**	CARBON RESISTOR (CHIP)	10.0K 63M J RECT.	チップ抵抗			
R200	**RD454680**	CARBON RESISTOR (CHIP)	68.0 63M J RECT.	チップ抵抗			01
R206	**RD454680**	CARBON RESISTOR (CHIP)	68.0 63M J RECT.	チップ抵抗			01
R207	**RD454680**	CARBON RESISTOR (CHIP)	68.0 63M J RECT.	チップ抵抗			01
R228	**RD457150**	CARBON RESISTOR (CHIP)	15.0K 63M J RECT.	チップ抵抗			01
R229	**RD457150**	CARBON RESISTOR (CHIP)	15.0K 63M J RECT.	チップ抵抗			01
R230	**RD45000R**	CARBON RESISTOR (CHIP)	0.00 63M J RECT.	チップ抵抗			01
R231	**RD253100**	CARBON RESISTOR (CHIP)	1.0 0.1 J RECT.	チップ抵抗			

* : New Parts

RANK : Japan only

DM

REF NO.	PART NO.	DESCRIPTION		部品名	REMARKS	QTY	RANK
R236	**RD457100**	CARBON RESISTOR (CHIP)	10.0K 63M J RECT.	チップ抵抗			
R239	**RD45615R**	CARBON RESISTOR (CHIP)	1.5K 63M J RECT.	チップ抵抗			01
R249	**RD45747R**	CARBON RESISTOR (CHIP)	47.0K 63M J RECT.	チップ抵抗			01
R252	**RD45000R**	CARBON RESISTOR (CHIP)	0.00 63M J RECT.	チップ抵抗			01
R257	**RD455100**	CARBON RESISTOR (CHIP)	100.0 63M J RECT.	チップ抵抗			
R258	**RD455100**	CARBON RESISTOR (CHIP)	100.0 63M J RECT.	チップ抵抗			
R279	**RD454220**	CARBON RESISTOR (CHIP)	22.0 63M J RECT.	チップ抵抗			
R284	**RD456470**	CARBON RESISTOR (CHIP)	4.7K 63M J RECT.	チップ抵抗			
-287	**RD456470**	CARBON RESISTOR (CHIP)	4.7K 63M J RECT.	チップ抵抗			
R290	**RD45000R**	CARBON RESISTOR (CHIP)	0.00 63M J RECT.	チップ抵抗			01
R291	**RD45000R**	CARBON RESISTOR (CHIP)	0.00 63M J RECT.	チップ抵抗			01
R292	**RD457100**	CARBON RESISTOR (CHIP)	10.0K 63M J RECT.	チップ抵抗			
R298	**RD45747R**	CARBON RESISTOR (CHIP)	47.0K 63M J RECT.	チップ抵抗			01
R305	**RD45000R**	CARBON RESISTOR (CHIP)	0.00 63M J RECT.	チップ抵抗			01
R306	**RD350000**	CARBON RESISTOR (CHIP)	0 63M J RECT.	チップ抵抗			
R307	**RD350000**	CARBON RESISTOR (CHIP)	0 63M J RECT.	チップ抵抗			
R308	**RD45747R**	CARBON RESISTOR (CHIP)	47.0K 63M J RECT.	チップ抵抗			01
RA014	**WH206200**	RESISTOR ARRAY	47 X 4	抵抗アレイ			01
-017	**WH206200**	RESISTOR ARRAY	47 X 4	抵抗アレイ			01
RA038	**WH205800**	RESISTOR ARRAY	33 X 4	抵抗アレイ			01
-043	**WH205800**	RESISTOR ARRAY	33 X 4	抵抗アレイ			01
RA050	**WH211800**	RESISTOR ARRAY	10K X 4	抵抗アレイ			01
RA062	**WH205400**	RESISTOR ARRAY	22 X 4	抵抗アレイ			01
-065	**WH205400**	RESISTOR ARRAY	22 X 4	抵抗アレイ			01
RA067	**WH205400**	RESISTOR ARRAY	22 X 4	抵抗アレイ			01
RA077	**WH206600**	RESISTOR ARRAY	68 X 4	抵抗アレイ			01
RA078	**WH206600**	RESISTOR ARRAY	68 X 4	抵抗アレイ			01
RA081	**WH206600**	RESISTOR ARRAY	68 X 4	抵抗アレイ			01
TA001	**WC66850R**	DIGITAL TRANSISTOR	UMG5N	デジタルトランジスタ			01
C001	**US145100**	CERAMIC CAPACITOR (CHIP)	0.1000 25V Z RECT.	チップセラ(F)			
-008	**US145100**	CERAMIC CAPACITOR (CHIP)	0.1000 25V Z RECT.	チップセラ(F)			
C009	**US062100**	CERAMIC CAPACITOR (CHIP)	100P 50V J RECT.	チップセラ(SL)			
C010	**US062100**	CERAMIC CAPACITOR (CHIP)	100P 50V J RECT.	チップセラ(SL)			
C011	**UF037100**	ELECTROLYTIC CAPACITOR(CHIP)	10 16V	チップケミコン			
C012	**US062100**	CERAMIC CAPACITOR (CHIP)	100P 50V J RECT.	チップセラ(SL)			
C013	**US062100**	CERAMIC CAPACITOR (CHIP)	100P 50V J RECT.	チップセラ(SL)			
C015	**US062100**	CERAMIC CAPACITOR (CHIP)	100P 50V J RECT.	チップセラ(SL)			
C016	**US145100**	CERAMIC CAPACITOR (CHIP)	0.1000 25V Z RECT.	チップセラ(F)			
C017	**US062100**	CERAMIC CAPACITOR (CHIP)	100P 50V J RECT.	チップセラ(SL)			
-020	**US062100**	CERAMIC CAPACITOR (CHIP)	100P 50V J RECT.	チップセラ(SL)			
C021	**US063100**	CERAMIC CAPACITOR (CHIP)	1000P 50V K RECT.	チップセラ(B)			
C022	**US062390**	CERAMIC CAPACITOR (CHIP)	390P 50V J RECT.	チップセラ(SL)			
C023	**UF038100**	ELECTROLYTIC CAPACITOR(CHIP)	100 16V	チップケミコン			
C024	**US063100**	CERAMIC CAPACITOR (CHIP)	1000P 50V K RECT.	チップセラ(B)			
C027	**US06127R**	CERAMIC CAPACITOR (CHIP)	27P 50V J RECT.	チップセラ(CH)			01
C028	**US06127R**	CERAMIC CAPACITOR (CHIP)	27P 50V J RECT.	チップセラ(CH)			01
C029	**US145100**	CERAMIC CAPACITOR (CHIP)	0.1000 25V Z RECT.	チップセラ(F)			
C030	**US06127R**	CERAMIC CAPACITOR (CHIP)	27P 50V J RECT.	チップセラ(CH)			01
C047	**US625100**	CERAMIC CAPACITOR (CHIP)	0.100 10V K RECT.	チップセラ(BJ)			01
C048	**UF037100**	ELECTROLYTIC CAPACITOR(CHIP)	10 16V	チップケミコン			
C049	**US625100**	CERAMIC CAPACITOR (CHIP)	0.100 10V K RECT.	チップセラ(BJ)			01
C073	**WG251600**	CERAMIC CAPACITOR (CHIP)	4.7 6.3V K RECT.	チップセラ			01
C074	**UF037100**	ELECTROLYTIC CAPACITOR(CHIP)	10 16V	チップケミコン			
C075	**US625100**	CERAMIC CAPACITOR (CHIP)	0.100 10V K RECT.	チップセラ(BJ)			01
C076	**US046100**	CERAMIC CAPACITOR (CHIP)	1.00 25V K RECT.	チップセラ(B)			01
C077	**WN019700**	CERAMIC CAPACITOR (CHIP)	2.200 16V K RECT.	チップセラ			
C078	**US046100**	CERAMIC CAPACITOR (CHIP)	1.00 25V K RECT.	チップセラ(B)			01
C079	**WG251600**	CERAMIC CAPACITOR (CHIP)	4.7 6.3V K RECT.	チップセラ			01
C080	**UF037100**	ELECTROLYTIC CAPACITOR(CHIP)	10 16V	チップケミコン			
-082	**UF037100**	ELECTROLYTIC CAPACITOR(CHIP)	10 16V	チップケミコン			
C083	**WG969400**	MONOLITHIC CERAMIC CAP(CHIP)	10.000 6.3V K KAKU	チップ積層セラコン			01
C084	**US625100**	CERAMIC CAPACITOR (CHIP)	0.100 10V K RECT.	チップセラ(BJ)			01
-086	**US625100**	CERAMIC CAPACITOR (CHIP)	0.100 10V K RECT.	チップセラ(BJ)			01
C088	**US634100**	CERAMIC CAPACITOR (CHIP)	0.010 16V K RECT.	チップセラ(B)			
C092	**WB29110R**	ELECTROLYTIC CAPACITOR(CHIP)	35V EEE1VA101UP	チップケミコン			
C093	**WG969400**	MONOLITHIC CERAMIC CAP(CHIP)	10.000 6.3V K KAKU	チップ積層セラコン			01
C094	**US634100**	CERAMIC CAPACITOR (CHIP)	0.010 16V K RECT.	チップセラ(B)			
C095	**WB51600R**	ELECTROLYTIC CAPACITOR(CHIP)	100 6.3V EEEFK0J10	チップケミコン			01
C096	**WN019700**	CERAMIC CAPACITOR (CHIP)	2.200 16V K RECT.	チップセラ			
C098	**WC37000R**	ELECTROLYTIC CAPACITOR(CHIP)	220.00 35.0V	チップケミコン UD			01

∗ : New Parts

RANK : Japan only

DM

REF NO.	PART NO.	DESCRIPTION		部品名	REMARKS	QTY	RANK
C099	**UF06610R**	ELECTROLYTIC CAPACITOR(CHIP)	1 50V	チップケミコン			01
C100	**UF06610R**	ELECTROLYTIC CAPACITOR(CHIP)	1 50V	チップケミコン			01
C101	**UF038100**	ELECTROLYTIC CAPACITOR(CHIP)	100 16V	チップケミコン			
C102	**WG969400**	MONOLITHIC CERAMIC CAP(CHIP)	10.000 6.3V K KAKU	チップ積層セラコン			01
C104	**UF038100**	ELECTROLYTIC CAPACITOR(CHIP)	100 16V	チップケミコン			
C105	**WG969400**	MONOLITHIC CERAMIC CAP(CHIP)	10.000 6.3V K KAKU	チップ積層セラコン			01
C106	**WJ590700**	CERAMIC CAPACITOR (CHIP)	0.47 16V K RECT.	チップセラ			
C107	**US663100**	CERAMIC CAPACITOR (CHIP)	1000P 50V K RECT.	チップセラ(B)			01
C110	**WN110600**	MONOLITHIC CERAMIC CAP(CHIP)	4.700 25V K KAKUTE	チップ積層セラコン			01
C111	**UF14810R**	ELECTROLYTIC CAPACITOR(CHIP)	100 25V	チップケミコン			01
C112	**WN562400**	ELECTROLYTIC CAPACITOR(CHIP)	220.00 16.0V	チップケミコン UD			01
C113	**US662100**	CERAMIC CAPACITOR (CHIP)	100P 50V J RECT.	チップセラ(CH)			
C132	**US063100**	CERAMIC CAPACITOR (CHIP)	1000P 50V K RECT.	チップセラ(B)			
C134	**US625100**	CERAMIC CAPACITOR (CHIP)	0.100 10V K RECT.	チップセラ(BJ)			01
C137	**US661100**	CERAMIC CAPACITOR (CHIP)	10P 50V D RECT.	チップセラ(CH)			01
C138	**US661100**	CERAMIC CAPACITOR (CHIP)	10P 50V D RECT.	チップセラ(CH)			01
C140	**WG888300**	MONOLITHIC CERAMIC CAP(CHIP)	10.0 6.3V K TP	チップ積層セラコン			01
C140	**WP882000**	CERAMIC CAPACITOR (CHIP)	10U 6.3V K RECT.	チップセラ			
C141	**US625100**	CERAMIC CAPACITOR (CHIP)	0.100 10V K RECT.	チップセラ(BJ)			01
-144	**US625100**	CERAMIC CAPACITOR (CHIP)	0.100 10V K RECT.	チップセラ(BJ)			01
C145	**WG888300**	MONOLITHIC CERAMIC CAP(CHIP)	10.0 6.3V K TP	チップ積層セラコン			01
C145	**WP882000**	CERAMIC CAPACITOR (CHIP)	10U 6.3V K RECT.	チップセラ			
C146	**US625100**	CERAMIC CAPACITOR (CHIP)	0.100 10V K RECT.	チップセラ(BJ)			01
-153	**US625100**	CERAMIC CAPACITOR (CHIP)	0.100 10V K RECT.	チップセラ(BJ)			01
C154	**WG888300**	MONOLITHIC CERAMIC CAP(CHIP)	10.0 6.3V K TP	チップ積層セラコン			01
C154	**WP882000**	CERAMIC CAPACITOR (CHIP)	10U 6.3V K RECT.	チップセラ			
C156	**US625100**	CERAMIC CAPACITOR (CHIP)	0.100 10V K RECT.	チップセラ(BJ)			01
C157	**WG888300**	MONOLITHIC CERAMIC CAP(CHIP)	10.0 6.3V K TP	チップ積層セラコン			01
C157	**WP882000**	CERAMIC CAPACITOR (CHIP)	10U 6.3V K RECT.	チップセラ			
C158	**US625100**	CERAMIC CAPACITOR (CHIP)	0.100 10V K RECT.	チップセラ(BJ)			01
-163	**US625100**	CERAMIC CAPACITOR (CHIP)	0.100 10V K RECT.	チップセラ(BJ)			01
C165	**US625100**	CERAMIC CAPACITOR (CHIP)	0.100 10V K RECT.	チップセラ(BJ)			01
-167	**US625100**	CERAMIC CAPACITOR (CHIP)	0.100 10V K RECT.	チップセラ(BJ)			01
C205	**US625100**	CERAMIC CAPACITOR (CHIP)	0.100 10V K RECT.	チップセラ(BJ)			01
C214	**US625100**	CERAMIC CAPACITOR (CHIP)	0.100 10V K RECT.	チップセラ(BJ)			01
-217	**US625100**	CERAMIC CAPACITOR (CHIP)	0.100 10V K RECT.	チップセラ(BJ)			01
C219	**US625100**	CERAMIC CAPACITOR (CHIP)	0.100 10V K RECT.	チップセラ(BJ)			01
C220	**US625100**	CERAMIC CAPACITOR (CHIP)	0.100 10V K RECT.	チップセラ(BJ)			01
C229	**US625100**	CERAMIC CAPACITOR (CHIP)	0.100 10V K RECT.	チップセラ(BJ)			01
C230	**WG888300**	MONOLITHIC CERAMIC CAP(CHIP)	10.0 6.3V K TP	チップ積層セラコン			01
C230	**WP882000**	CERAMIC CAPACITOR (CHIP)	10U 6.3V K RECT.	チップセラ			
C231	**US663100**	CERAMIC CAPACITOR (CHIP)	1000P 50V K RECT.	チップセラ(B)			01
C232	**US663100**	CERAMIC CAPACITOR (CHIP)	1000P 50V K RECT.	チップセラ(B)			01
C233	**US625100**	CERAMIC CAPACITOR (CHIP)	0.100 10V K RECT.	チップセラ(BJ)			01
C238	**US625100**	CERAMIC CAPACITOR (CHIP)	0.100 10V K RECT.	チップセラ(BJ)			01
-240	**US625100**	CERAMIC CAPACITOR (CHIP)	0.100 10V K RECT.	チップセラ(BJ)			01
C244	**US625100**	CERAMIC CAPACITOR (CHIP)	0.100 10V K RECT.	チップセラ(BJ)			01
C246	**US625100**	CERAMIC CAPACITOR (CHIP)	0.100 10V K RECT.	チップセラ(BJ)			01
C247	**US625100**	CERAMIC CAPACITOR (CHIP)	0.100 10V K RECT.	チップセラ(BJ)			01
C249	**V8085400**	CERAMIC CAPACITOR (CHIP)	0.1000 25V K RECT.	チップセラ(B)			
C250	**V8085400**	CERAMIC CAPACITOR (CHIP)	0.1000 25V K RECT.	チップセラ(B)			
C251	**WN019700**	CERAMIC CAPACITOR (CHIP)	2.200 16V K RECT.	チップセラ			
C252	**V8085400**	CERAMIC CAPACITOR (CHIP)	0.1000 25V K RECT.	チップセラ(B)			
C263	**US046100**	CERAMIC CAPACITOR (CHIP)	1.00 25V K RECT.	チップセラ(B)			01
-266	**US046100**	CERAMIC CAPACITOR (CHIP)	1.00 25V K RECT.	チップセラ(B)			01
C270	**V8085400**	CERAMIC CAPACITOR (CHIP)	0.1000 25V K RECT.	チップセラ(B)			
-273	**V8085400**	CERAMIC CAPACITOR (CHIP)	0.1000 25V K RECT.	チップセラ(B)			
C275	**US662100**	CERAMIC CAPACITOR (CHIP)	100P 50V J RECT.	チップセラ(CH)			
C276	**V8085400**	CERAMIC CAPACITOR (CHIP)	0.1000 25V K RECT.	チップセラ(B)			
-279	**V8085400**	CERAMIC CAPACITOR (CHIP)	0.1000 25V K RECT.	チップセラ(B)			
C280	**US662100**	CERAMIC CAPACITOR (CHIP)	100P 50V J RECT.	チップセラ(CH)			
C283	**V8085400**	CERAMIC CAPACITOR (CHIP)	0.1000 25V K RECT.	チップセラ(B)			
-288	**V8085400**	CERAMIC CAPACITOR (CHIP)	0.1000 25V K RECT.	チップセラ(B)			
C294	**US663100**	CERAMIC CAPACITOR (CHIP)	1000P 50V K RECT.	チップセラ(B)			01
C295	**US663100**	CERAMIC CAPACITOR (CHIP)	1000P 50V K RECT.	チップセラ(B)			01
C300	**V8085400**	CERAMIC CAPACITOR (CHIP)	0.1000 25V K RECT.	チップセラ(B)			
C302	**US625100**	CERAMIC CAPACITOR (CHIP)	0.100 10V K RECT.	チップセラ(BJ)			01
C303	**UF038100**	ELECTROLYTIC CAPACITOR(CHIP)	100 16V	チップケミコン			
C306	**UF037100**	ELECTROLYTIC CAPACITOR(CHIP)	10 16V	チップケミコン			
C307	**UF037100**	ELECTROLYTIC CAPACITOR(CHIP)	10 16V	チップケミコン			

* : New Parts

RANK : Japan only

DM

REF NO.	PART NO.	DESCRIPTION		部品名	REMARKS	QTY	RANK
C316	**US661220**	CERAMIC CAPACITOR (CHIP)	22P 50V J RECT.	チップセラ(CH)			
C317	**US661220**	CERAMIC CAPACITOR (CHIP)	22P 50V J RECT.	チップセラ(CH)			
C346	**US662100**	CERAMIC CAPACITOR (CHIP)	100P 50V J RECT.	チップセラ(CH)			
C347	**US662100**	CERAMIC CAPACITOR (CHIP)	100P 50V J RECT.	チップセラ(CH)			
C348	**US662100**	CERAMIC CAPACITOR (CHIP)	100P 50V J RECT.	チップセラ(CH)			
C349	**US662820**	CERAMIC CAPACITOR (CHIP)	820P 50V K RECT.	チップセラ(B)			
C350	**US662820**	CERAMIC CAPACITOR (CHIP)	820P 50V K RECT.	チップセラ(B)			
CN001	**WC199700**	CONNECTOR	52808 27P TE	FFC/FPCコネク			03
CN002	**WC195200**	CONNECTOR	52808 14P TE	FFC/FPCコネク			
CN005	**WC19500R**	CONNECTOR	52808 12P TE	FFC/FPCコネク			01
CN006	**WC195300**	CONNECTOR	52808 15P TE	FFC/FPCコネ			01
CN007	**WC194500**	CONNECTOR	52808 6P TE	FFC/FPCコネク			
CN008	**WC19930R**	CONNECTOR	52808 18P TE	FFC/FPCコネク			01
CN009	**WC194400**	CONNECTOR	52808 5P TE	FFC/FPCコネク			01
CN10	**VT389100**	CONNECTOR	PH 10P TE	ベース付ポスト			
D003	**V2376600**	DIODE	RB500V-40 TAPING	ショットキダイオード			
D004	**VT332900**	DIODE	1SS355 TE-17 TP	ダイオード			
-011	**VT332900**	DIODE	1SS355 TE-17 TP	ダイオード			
D012	**WM940400**	DIODE	RB070M-30TR TP	ダイオード			01
DA001	**V9424900**	DIODE ARRAY	1SS372 TE85L	ダイオードアレイ			01
-004	**V9424900**	DIODE ARRAY	1SS372 TE85L	ダイオードアレイ			01
DA001	**WP361700**	DIODE ARRAY	KDR731-RTK/P 0.07A	ダイオードアレイ			
-004	**WP361700**	DIODE ARRAY	KDR731-RTK/P 0.07A	ダイオードアレイ			
IC006	**X5422A00**	IC	S1D13700F01A100 LC	I C	LCD CONTROLLER		08
IC008	**X3294A00**	IC	MC34063ECD-TR	I C	DC-DC CONVERTER		
IC012	**XZ56010R**	IC	UPD789022GB-A15-8E	I C	CPU		05
IC015	**YC681B00**	IC	WM8524CGEDT/R	I C	DAC		
IC016	**X7357B00**	IC	PCM1803ADBR	I C	ADC		03
IC017	**X9292A00**	IC	R1172H121D-T1-FE	I C	REGULATOR +1.2V		01
IC017	**YE238A00**	IC	RP132H121D-T1-FE 1	I C			
IC019	**YD113A00**	IC	RP131H331D-T1-FE 3	I C	REGULATOR +3.3V		01
IC020	**YD832A00**	IC	R1245K003G-TR	I C	DC-DC CONVERTER		02
IC023	**--**	IC	R8A02042BG	I C	SWX08 (YC479A0)		
IC026	**X3584E00**	IC	W9812G6JH-6 SDRAM	I C	SDRAM 128M		04
IC027	**X3584E00**	IC	W9812G6JH-6 SDRAM	I C	SDRAM 128M		04
IC030	**X6688A00**	IC	SN74LV14APWR INV	I C	INVERTER		
IC031	**XZ414F00**	IC	W9864G6JH-6 SDRAM	I C	SDRAM 64M		03
IC032	**X8506A01**	IC	TC74VHC123AFT EL,K	I C	MULTIVIBRATOR		02
IC033	**X2377A0R**	IC	SN74LV21APWR	I C	AND		01
IC035	**YD652A00**	IC	YDA164C-QZE2	I C	POWER AMPLIFIER 20Wx2		04
L001	**VY657200**	CHIP INDUCTANCE	600 BK1608HM601-T	チップインダクタ			
L002	**VY657200**	CHIP INDUCTANCE	600 BK1608HM601-T	チップインダクタ			
L003	**V858970R**	CHIP INDUCTANCE	330U SLF7045T-331M	チップインダクタ			02
L004	**VY657200**	CHIP INDUCTANCE	600 BK1608HM601-T	チップインダクタ			
L005	**WK139000**	CHIP INDUCTANCE	600 BK1005HM601-T	チップインダクタ			01
-008	**WK139000**	CHIP INDUCTANCE	600 BK1005HM601-T	チップインダクタ			01
L009	**WM457700**	COIL	7E04NA-2R4N-R SMD	コイル 2.4U			01
L009	**ZA324800**	CHIP INDUCTANCE	2.4U 7E04NB-2R4N-R	チップインダクタ			01
L010	**VY657200**	CHIP INDUCTANCE	600 BK1608HM601-T	チップインダクタ			
-020	**VY657200**	CHIP INDUCTANCE	600 BK1608HM601-T	チップインダクタ			
L022	**VY657200**	CHIP INDUCTANCE	600 BK1608HM601-T	チップインダクタ			
-034	**VY657200**	CHIP INDUCTANCE	600 BK1608HM601-T	チップインダクタ			
L038	**WK139000**	CHIP INDUCTANCE	600 BK1005HM601-T	チップインダクタ			01
L039	**WJ018200**	CHIP INDUCTANCE	BLM18SG700TN1D 1	チップインダクタ			01
L040	**WZ540200**	CHIP INDUCTANCE	10U DER7052-100M-R	チップインダクタ			01
-043	**WZ540200**	CHIP INDUCTANCE	10U DER7052-100M-R	チップインダクタ			01
L045	**WE863900**	CHIP INDUCTANCE	DLP11SN900HL2L 1	コモンモードコイル			01
L046	**WE863900**	CHIP INDUCTANCE	DLP11SN900HL2L 1	コモンモードコイル			01
L048	**WH559500**	CHIP INDUCTANCE	BLM18PG471SN1D 1	チップインダクタ			01
L049	**WK139000**	CHIP INDUCTANCE	600 BK1005HM601-T	チップインダクタ			01
L050	**WK139000**	CHIP INDUCTANCE	600 BK1005HM601-T	チップインダクタ			01
R001	**RD355100**	CARBON RESISTOR (CHIP)	100.0 63M J RECT.	チップ抵抗			
R002	**RD356100**	CARBON RESISTOR (CHIP)	1.0K 63M J RECT.	チップ抵抗			01
R003	**RD354220**	CARBON RESISTOR (CHIP)	22.0 63M J RECT.	チップ抵抗			
R004	**RD357100**	CARBON RESISTOR (CHIP)	10.0K 63M J RECT.	チップ抵抗			
R005	**RD357470**	CARBON RESISTOR (CHIP)	47.0K 63M J RECT.	チップ抵抗			
R010	**RD355221**	CARBON RESISTOR (CHIP)	220.0 63M J RECT.	チップ抵抗			01
R011	**RD15310R**	CARBON RESISTOR (CHIP)	1.0 1/4 J TP	チップ抵抗			01
-013	**RD15310R**	CARBON RESISTOR (CHIP)	1.0 1/4 J TP	チップ抵抗			01
R014	**RD456680**	CARBON RESISTOR (CHIP)	6.8K 63M J RECT.	チップ抵抗			

∗ : New Parts

RANK : Japan only

DM

	REF NO.	PART NO.	DESCRIPTION		部品名	REMARKS	QTY	RANK
*	R015	**RD456130**	CARBON RESISTOR (CHIP)	1.3K 63M J RECT.	チップ抵抗			
	R018	**RD357150**	CARBON RESISTOR (CHIP)	15.0K 63M J RECT.	チップ抵抗			
	R019	**RD357150**	CARBON RESISTOR (CHIP)	15.0K 63M J RECT.	チップ抵抗			
	R022	**RD350000**	CARBON RESISTOR (CHIP)	0 63M J RECT.	チップ抵抗			
	R031	**RD455100**	CARBON RESISTOR (CHIP)	100.0 63M J RECT.	チップ抵抗			
	R032	**RD455100**	CARBON RESISTOR (CHIP)	100.0 63M J RECT.	チップ抵抗			
	R038	**RD455100**	CARBON RESISTOR (CHIP)	100.0 63M J RECT.	チップ抵抗			
	R039	**RD455100**	CARBON RESISTOR (CHIP)	100.0 63M J RECT.	チップ抵抗			
	R053	**RD45747R**	CARBON RESISTOR (CHIP)	47.0K 63M J RECT.	チップ抵抗			01
	R055	**RD45747R**	CARBON RESISTOR (CHIP)	47.0K 63M J RECT.	チップ抵抗			01
	R057	**RD45747R**	CARBON RESISTOR (CHIP)	47.0K 63M J RECT.	チップ抵抗			01
	R059	**RD45747R**	CARBON RESISTOR (CHIP)	47.0K 63M J RECT.	チップ抵抗			01
	R066	**RD45000R**	CARBON RESISTOR (CHIP)	0.00 63M J RECT.	チップ抵抗			01
	R070	**RD45747R**	CARBON RESISTOR (CHIP)	47.0K 63M J RECT.	チップ抵抗			01
	R075	**RF457220**	CARBON RESISTOR (CHIP)	22.0K D RECT.	チップ抵抗			
	R077	**RF456100**	CARBON RESISTOR (CHIP)	1.0K D RECT.	チップ抵抗			
	R083	**RD454470**	CARBON RESISTOR (CHIP)	47.0 63M J RECT.	チップ抵抗			01
	R086	**RD45747R**	CARBON RESISTOR (CHIP)	47.0K 63M J RECT.	チップ抵抗			01
	R087	**RD457220**	CARBON RESISTOR (CHIP)	22.0K 63M J RECT.	チップ抵抗			01
	R088	**RD457330**	CARBON RESISTOR (CHIP)	33.0K 63M J RECT.	チップ抵抗			01
	R089	**RD455100**	CARBON RESISTOR (CHIP)	100.0 63M J RECT.	チップ抵抗			
	R093	**RD357470**	CARBON RESISTOR (CHIP)	47.0K 63M J RECT.	チップ抵抗			
	R094	**RD357470**	CARBON RESISTOR (CHIP)	47.0K 63M J RECT.	チップ抵抗			
	R095	**RD356100**	CARBON RESISTOR (CHIP)	1.0K 63M J RECT.	チップ抵抗			01
	R096	**RD458100**	CARBON RESISTOR (CHIP)	100.0K 63M J RECT.	チップ抵抗			
	R100	**RD455330**	CARBON RESISTOR (CHIP)	330.0 63M J RECT.	チップ抵抗			
	R102	**RD454680**	CARBON RESISTOR (CHIP)	68.0 63M J RECT.	チップ抵抗			01
	R105	**RD454680**	CARBON RESISTOR (CHIP)	68.0 63M J RECT.	チップ抵抗			01
	R108	**RD454680**	CARBON RESISTOR (CHIP)	68.0 63M J RECT.	チップ抵抗			01
	R110	**RD454680**	CARBON RESISTOR (CHIP)	68.0 63M J RECT.	チップ抵抗			01
	R111	**RD454680**	CARBON RESISTOR (CHIP)	68.0 63M J RECT.	チップ抵抗			01
	R115	**RD455150**	CARBON RESISTOR (CHIP)	150.0 63M J RECT.	チップ抵抗			
	R122	**RD45000R**	CARBON RESISTOR (CHIP)	0.00 63M J RECT.	チップ抵抗			01
	R123	**RD454220**	CARBON RESISTOR (CHIP)	22.0 63M J RECT.	チップ抵抗			
	R124	**RD45000R**	CARBON RESISTOR (CHIP)	0.00 63M J RECT.	チップ抵抗			01
	R125	**RD454220**	CARBON RESISTOR (CHIP)	22.0 63M J RECT.	チップ抵抗			
	-127	**RD454220**	CARBON RESISTOR (CHIP)	22.0 63M J RECT.	チップ抵抗			
	R133	**RD454220**	CARBON RESISTOR (CHIP)	22.0 63M J RECT.	チップ抵抗			
	R137	**RD454680**	CARBON RESISTOR (CHIP)	68.0 63M J RECT.	チップ抵抗			01
	R139	**RD454680**	CARBON RESISTOR (CHIP)	68.0 63M J RECT.	チップ抵抗			01
	R143	**RD454680**	CARBON RESISTOR (CHIP)	68.0 63M J RECT.	チップ抵抗			01
	R144	**RD454100**	CARBON RESISTOR (CHIP)	10.0 63M J RECT.	チップ抵抗			01
	R145	**RD454680**	CARBON RESISTOR (CHIP)	68.0 63M J RECT.	チップ抵抗			01
	R146	**RD454100**	CARBON RESISTOR (CHIP)	10.0 63M J RECT.	チップ抵抗			01
	R150	**RD457100**	CARBON RESISTOR (CHIP)	10.0K 63M J RECT.	チップ抵抗			
	R151	**RD457100**	CARBON RESISTOR (CHIP)	10.0K 63M J RECT.	チップ抵抗			
	R157	**RD455100**	CARBON RESISTOR (CHIP)	100.0 63M J RECT.	チップ抵抗			
*	R179	**RA154270**	METAL FILM RESISTOR (CHIP)	27.0 63M D RECT.	チップ金被抵抗			
*	R180	**RA154270**	METAL FILM RESISTOR (CHIP)	27.0 63M D RECT.	チップ金被抵抗			
	R181	**RA154220**	METAL FILM RESISTOR (CHIP)	22.0 63M D RECT.	チップ金被抵抗			
	R182	**RA154220**	METAL FILM RESISTOR (CHIP)	22.0 63M D RECT.	チップ金被抵抗			
	R186	**RD456100**	CARBON RESISTOR (CHIP)	1.0K 63M J RECT.	チップ抵抗			
	R190	**RD455100**	CARBON RESISTOR (CHIP)	100.0 63M J RECT.	チップ抵抗			
	R191	**RD456100**	CARBON RESISTOR (CHIP)	1.0K 63M J RECT.	チップ抵抗			
	R192	**RD458470**	CARBON RESISTOR (CHIP)	470.0K 63M J RECT.	チップ抵抗			
	R193	**RD454680**	CARBON RESISTOR (CHIP)	68.0 63M J RECT.	チップ抵抗			01
	R194	**RD458470**	CARBON RESISTOR (CHIP)	470.0K 63M J RECT.	チップ抵抗			
	R196	**RD454680**	CARBON RESISTOR (CHIP)	68.0 63M J RECT.	チップ抵抗			01
	R201	**RD454680**	CARBON RESISTOR (CHIP)	68.0 63M J RECT.	チップ抵抗			01
	-205	**RD454680**	CARBON RESISTOR (CHIP)	68.0 63M J RECT.	チップ抵抗			01
	R208	**RD45000R**	CARBON RESISTOR (CHIP)	0.00 63M J RECT.	チップ抵抗			01
	-211	**RD45000R**	CARBON RESISTOR (CHIP)	0.00 63M J RECT.	チップ抵抗			01
	R212	**RD45522R**	CARBON RESISTOR (CHIP)	220.0 63M J RECT.	チップ抵抗			01
	-214	**RD45522R**	CARBON RESISTOR (CHIP)	220.0 63M J RECT.	チップ抵抗			01
	R215	**RD45000R**	CARBON RESISTOR (CHIP)	0.00 63M J RECT.	チップ抵抗			01
	R217	**RD457100**	CARBON RESISTOR (CHIP)	10.0K 63M J RECT.	チップ抵抗			
	R218	**RD45000R**	CARBON RESISTOR (CHIP)	0.00 63M J RECT.	チップ抵抗			01
	R219	**RD457100**	CARBON RESISTOR (CHIP)	10.0K 63M J RECT.	チップ抵抗			
	R221	**RD45000R**	CARBON RESISTOR (CHIP)	0.00 63M J RECT.	チップ抵抗			01
	R222	**RD454470**	CARBON RESISTOR (CHIP)	47.0 63M J RECT.	チップ抵抗			01

* : New Parts

RANK : Japan only

DM,GHL88H,GHL88L,GHL88M

REF NO.	PART NO.	DESCRIPTION		部品名	REMARKS	QTY	RANK
R225	**RD454470**	CARBON RESISTOR (CHIP)	47.0 63M J RECT.	チップ抵抗			01
R240	**RD45000R**	CARBON RESISTOR (CHIP)	0.00 63M J RECT.	チップ抵抗			01
R243	**RD45000R**	CARBON RESISTOR (CHIP)	0.00 63M J RECT.	チップ抵抗			01
R244	**RD45615R**	CARBON RESISTOR (CHIP)	1.5K 63M J RECT.	チップ抵抗			01
R245	**RD456390**	CARBON RESISTOR (CHIP)	3.9K 63M J RECT.	チップ抵抗			
R246	**RD455100**	CARBON RESISTOR (CHIP)	100.0 63M J RECT.	チップ抵抗			
R247	**RD456100**	CARBON RESISTOR (CHIP)	1.0K 63M J RECT.	チップ抵抗			
R248	**RD455100**	CARBON RESISTOR (CHIP)	100.0 63M J RECT.	チップ抵抗			
R250	**RD458100**	CARBON RESISTOR (CHIP)	100.0K 63M J RECT.	チップ抵抗			
R251	**RD45747R**	CARBON RESISTOR (CHIP)	47.0K 63M J RECT.	チップ抵抗			01
R254	**RD456470**	CARBON RESISTOR (CHIP)	4.7K 63M J RECT.	チップ抵抗			
R269	**RD457150**	CARBON RESISTOR (CHIP)	15.0K 63M J RECT.	チップ抵抗			01
R270	**RD457150**	CARBON RESISTOR (CHIP)	15.0K 63M J RECT.	チップ抵抗			01
R275	**RD354220**	CARBON RESISTOR (CHIP)	22.0 63M J RECT.	チップ抵抗			
* R278	**RD456360**	CARBON RESISTOR (CHIP)	3.6K 63M J RECT.	チップ抵抗			
R280	**RD457100**	CARBON RESISTOR (CHIP)	10.0K 63M J RECT.	チップ抵抗			
-283	**RD457100**	CARBON RESISTOR (CHIP)	10.0K 63M J RECT.	チップ抵抗			
R293	**RD350000**	CARBON RESISTOR (CHIP)	0 63M J RECT.	チップ抵抗			
R294	**RD457100**	CARBON RESISTOR (CHIP)	10.0K 63M J RECT.	チップ抵抗			
R295	**RD456470**	CARBON RESISTOR (CHIP)	4.7K 63M J RECT.	チップ抵抗			
-297	**RD456470**	CARBON RESISTOR (CHIP)	4.7K 63M J RECT.	チップ抵抗			
R299	**RD350000**	CARBON RESISTOR (CHIP)	0 63M J RECT.	チップ抵抗			
R304	**RD350000**	CARBON RESISTOR (CHIP)	0 63M J RECT.	チップ抵抗			
RA022	**WH207000**	RESISTOR ARRAY	100 X 4	抵抗アレイ			01
RA028	**WH206200**	RESISTOR ARRAY	47 X 4	抵抗アレイ			01
RA029	**WH206200**	RESISTOR ARRAY	47 X 4	抵抗アレイ			01
RA030	**WH205600**	RESISTOR ARRAY	27 X 4	抵抗アレイ			
-037	**WH205600**	RESISTOR ARRAY	27 X 4	抵抗アレイ			
RA044	**WH212600**	RESISTOR ARRAY	22K X 4	抵抗アレイ			01
RA045	**WH207000**	RESISTOR ARRAY	100 X 4	抵抗アレイ			01
RA046	**WH209400**	RESISTOR ARRAY	1.0K X 4	抵抗アレイ			
RA047	**WH212600**	RESISTOR ARRAY	22K X 4	抵抗アレイ			01
RA048	**WH209400**	RESISTOR ARRAY	1.0K X 4	抵抗アレイ			
RA049	**WH209400**	RESISTOR ARRAY	1.0K X 4	抵抗アレイ			
RA051	**WH211800**	RESISTOR ARRAY	10K X 4	抵抗アレイ			01
RA052	**WH212600**	RESISTOR ARRAY	22K X 4	抵抗アレイ			01
RA054	**WH207000**	RESISTOR ARRAY	100 X 4	抵抗アレイ			01
RA055	**WH207000**	RESISTOR ARRAY	100 X 4	抵抗アレイ			01
RA060	**WH205400**	RESISTOR ARRAY	22 X 4	抵抗アレイ			01
RA061	**WH205400**	RESISTOR ARRAY	22 X 4	抵抗アレイ			01
RA066	**WH205400**	RESISTOR ARRAY	22 X 4	抵抗アレイ			01
RA068	**WH205400**	RESISTOR ARRAY	22 X 4	抵抗アレイ			01
RA079	**WH206600**	RESISTOR ARRAY	68 X 4	抵抗アレイ			01
RA080	**WH206600**	RESISTOR ARRAY	68 X 4	抵抗アレイ			01
RA082	**WH206600**	RESISTOR ARRAY	68 X 4	抵抗アレイ			01
RA083	**WH206600**	RESISTOR ARRAY	68 X 4	抵抗アレイ			01
RA094	**WH209400**	RESISTOR ARRAY	1.0K X 4	抵抗アレイ			
RA095	**WH211000**	RESISTOR ARRAY	4.7K X 4	抵抗アレイ			01
TH1	**V326060R**	POLY-SWITCH	MICRO SMD035F-2 SMD	ポリスイッチ			02
TR001	**WB12320R**	TRANSISTOR (ARRAY)	IMB10A T110	トランジスタアレイ			05
-004	**WB12320R**	TRANSISTOR (ARRAY)	IMB10A T110	トランジスタアレイ			05
TR005	**VY67760R**	DIGITAL TRANSISTOR	DTC123JKA TP	デジタルトランジスタ			01
TR006	**WG989900**	DIGITAL TRANSISTOR	KRA226S-RTK/P	デジタルトランジスタ			01
X001	**WA782100**	CERAMIC RESONATOR 5M	5.000M	セラミック振動子			
X002	**WH521200**	QUARTZ CRYSTAL UNIT 48MHZ	SG-310SCF 48M	水晶振動器			04
X002	**WM725500**	RESONATOR QUARTZ 48MHz	48M DSO321SR	水晶発振器			
X003	**WM135200**	RESONATOR QUARTZ	16.9344M DSX321G	水晶振動子			
	WF21280R	CIRCUIT BOARD	GHL88H	GHL88シートH	(WF46250)(X6246D0)		12
CN1	**WA61950R**	CONNECTOR	52151 17P SE	ワイヤートラップ			01
D1	**VB941200**	DIODE	1SS133,1SS176 TE-5	ダイオード			
-48	**VB941200**	DIODE	1SS133,1SS176 TE-5	ダイオード			
	WF21250R	CIRCUIT BOARD	GHL88L	GHL88シートL	(WF46230)(X6244D0)		13
CN1	**WA61950R**	CONNECTOR	52151 17P SE	ワイヤートラップ			01
D1	**VB941200**	DIODE	1SS133,1SS176 TE-5	ダイオード			
D5	**VB941200**	DIODE	1SS133,1SS176 TE-5	ダイオード			
-60	**VB941200**	DIODE	1SS133,1SS176 TE-5	ダイオード			
	WF21260R	CIRCUIT BOARD	GHL88M	GHL88シートM	(WF46240)(X6245G0)		13

* : New Parts

RANK : Japan only

GHL88M,MKO,MVR,PEDAL,PNL,PNR,PWR

	REF NO.	PART NO.	DESCRIPTION		部品名	REMARKS	QTY	RANK
	CN1	**WA61950R**	CONNECTOR	52151 17P SE	ワイヤートラップ			01
	CN2	**WG01190R**	CONNECTOR	52807 27P SE	FFCコネクタ			
	CN3	**WA61950R**	CONNECTOR	52151 17P SE	ワイヤートラップ			01
	D1	**VB941200**	DIODE	1SS133,1SS176 TE-5	ダイオード			
	-72	**VB941200**	DIODE	1SS133,1SS176 TE-5	ダイオード			
		--	CIRCUIT BOARD	MKO	MKOシート	(ZE90270)(ZE90120) (YE943B0)		
*		**ZE902200**	CIRCUIT BOARD	MVR	MVRシート	(ZE90120)(YE943B0)		
*		**ZE901900**	CIRCUIT BOARD	PEDAL	PEDALシート	(ZE90120)(YE943B0)		
*		**ZE901500**	CIRCUIT BOARD	PNL	PNLシート	(ZE90120)(YE943B0)		
*		**ZE901700**	CIRCUIT BOARD	PNR	PNRシート	(ZE90120)(YE943B0)		
*		**ZE902100**	CIRCUIT BOARD	PWR	PWRシート	(ZE90120)(YE943B0)		
	CN1	**V492820R**	CONNECTOR	52806-1210 12P TE	FFCコネクター			01
	CN2	**WG033600**	CONNECTOR	52806 15P TE	FFCコネクタ			
	CN3	**VI878100**	CONNECTOR	51048 3P TE	ケーブルホルダー			
	CN701	**WK843700**	CONNECTOR	52806 6P TE	FFCコネクター			
	CN901	**VI878100**	CONNECTOR	51048 3P TE	ケーブルホルダー			
	CN902	**VK024800**	CONNECTOR	52147 4P TE	ワイヤートラップ			
	CN903	**VI878000**	CONNECTOR	51048 2P TE	ケーブルホルダー			
	D1	**VB941200**	DIODE	1SS133,1SS176 TE-5	ダイオード			
	-8	**VB941200**	DIODE	1SS133,1SS176 TE-5	ダイオード			
	EC1	**VU48130R**	ENCODER	REB161-PVB-15FH1NA	16形エンコーダ	DATA ENTRY		03
	JK701	**V487480R**	CONNECTOR	DINJACK6P MD-S6130	ミニDINコネクタ	PEDAL UNIT		02
	L701	**V2993400**	COIL 20UH	R-5C TE-	チョークコイル			01
	-706	**V2993400**	COIL 20UH	R-5C TE-	チョークコイル			01
	LD1	**WG913200**	LED	BL-BEG201-LC22-21-	2色LED	START/STOP		01
	LD2	**WU175600**	LED	BL-B2141K-24F-FP7-	LED	SONG/AUDIO		01
	LD3	**WU175600**	LED	BL-B2141K-24F-FP7-	LED	STYLE		01
	LD4	**WU175600**	LED	BL-B2141K-24F-FP7-	LED	USB TO DEVICE		01
	R1	**HF454270**	CARBON RESISTOR	27.0 1/4 J AX TP	カーボン抵抗			01
	R2	**HF45418R**	CARBON RESISTOR	18.0 1/4 J AX TP	カーボン抵抗			01
	R3	**HF455100**	CARBON RESISTOR	100.0 1/4 J AX TP	カーボン抵抗			
	-5	**HF455100**	CARBON RESISTOR	100.0 1/4 J AX TP	カーボン抵抗			
*	SW64	**WZ033500**	PUSH SWITCH	ESE20D421	プッシュSW	STANDBY/ON		
	VR603	**WN157800**	ROTARY VARIABLE RESISTOR DUAL	B 20.0K XV012313YG	2連ロータリーVR	MASTER VOLUME		01
	WH101	**--**	WIRING ASSEMBLY	ENC	ENC束線	(ZF62920)		
	WH102	**--**	WIRING ASSEMBLY	SSW	SSW束線	(ZF51060)		
*		**YF221A00**	LOUD SPEAKER	5.0cm 6ohm 10W	スピーカ	Tweeter	2	
*		**YF014A00**	LOUD SPEAKER	12.0cm 4 ohm 10W	スピーカー	Woofer	2	
		WU967500	LCD UNIT		液晶ユニット			17
⚠		**WK014700**	AC ADAPTOR	PA-150U U	ACアダプター	U,C		08
⚠		**WR527000**	AC ADAPTOR	PA-150A E	ACアダプター	E,I		10
⚠		**WR527100**	AC ADAPTOR	PA-150A B	ACアダプター	B		11
⚠		**WR527200**	AC ADAPTOR	PA-150A CHN	ACアダプター	DGX-650B O		
⚠		**WU356400**	AC ADOPTOR	PA-150A K	ACアダプター	K		08

* : New Parts

RANK : Japan only

Pedal Unit

LP-7A/LP-7AWH

PARTS LIST

■ CONTENTS

Note) DESTINATION ABBREVIATIONS

A:	Australian model	O:	Chinese model
B:	British model	Q:	South-east Asia model
C:	Canadian model	T:	Taiwan model
D:	German model	U:	U.S.A. model
E:	European model	V:	General export model (110V)
F:	French model	W:	General export model (220V)
H:	North European model	N,X:	General export model
I:	Indonesian model	Y:	Export model
J:	Japanese model	K:	Korean model
M:	South African model	P:	Brazilian model

■ WARNING

Components having special characteristics are marked ⚠ and must be replaced with parts having specifications equal to those originally installed.

- ■ The numbers in “QTY” shows quantities for each unit.
- ■ The parts with “--” in “Part No.” are not available as spare parts.
- ■ This mark “ } ” in the REMARKS column means these parts are interchangeable.
- ■ The second letter of the shaded ( ) part number is I, not one.
- ■ The second letter of the shaded ( ) part number is O, not zero.

■ OVERALL ASSEMBLY

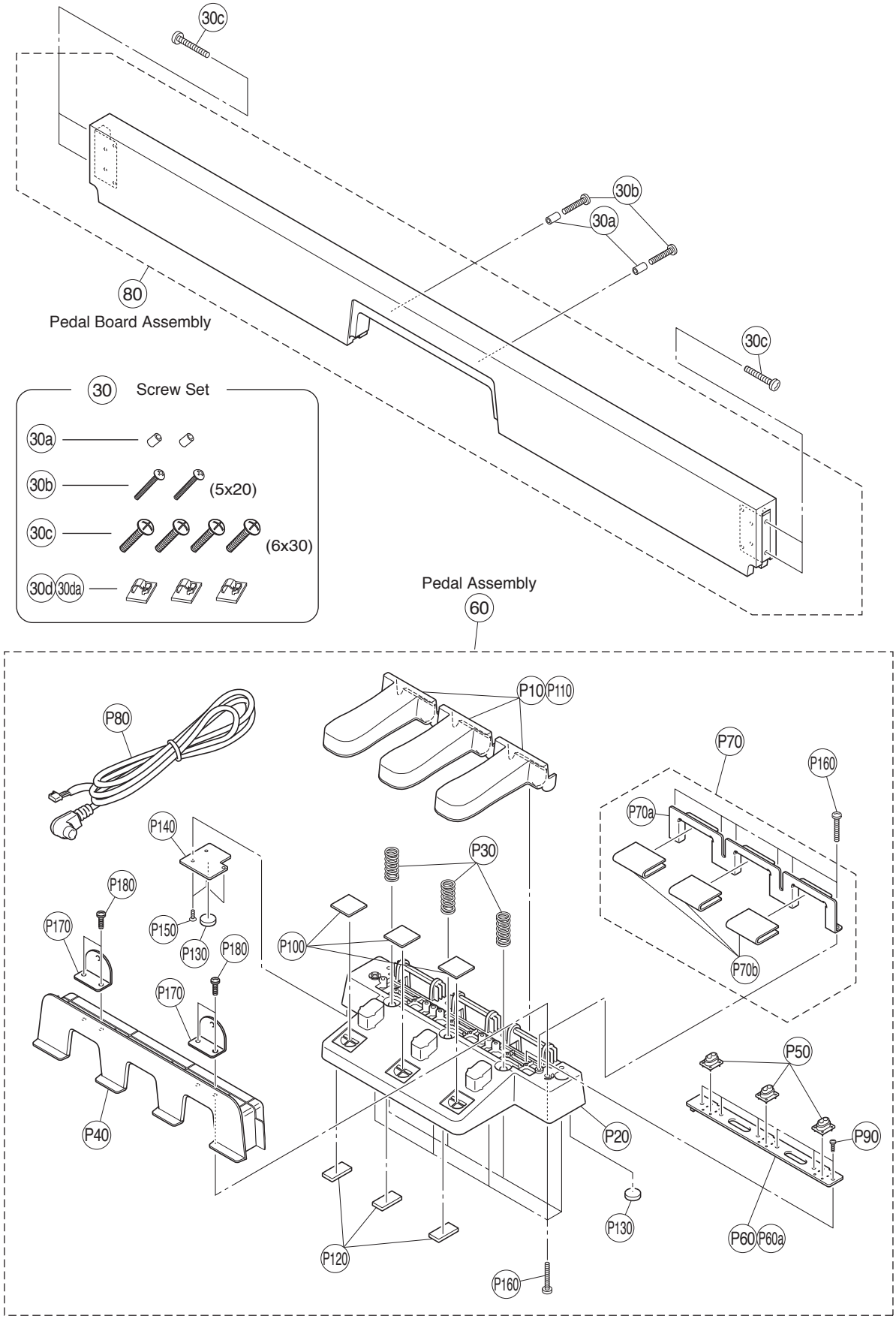

REF NO.	PART NO.	DESCRIPTION		部品名	REMARKS	QTY	RANK
		OVERALL ASSEMBLY		総組立	LP-7A/LP-7AWH		
30	**WQ613000**	SCREW SET		ネジセット	LP-7A		04
30	**ZD198800**	SCREW SET		ネジセット	LP-7AWH		04
30a	**--**	SPACER	5X12	スペーサー	(WQ53260)	2	
30b	**--**	SCREW MACHINE +TRUS	5.0X20 MFZN2B3	小ネジ＋TRUS	(WP09720)	2	
30c	**--**	SCREW MACHINE +TRUS	6.0X30 MFZN2B3	小ネジ＋TRUS	LP-7A (WF74230)	4	
30c	**--**	SCREW MACHINE +TRUS	6.0X30 MFZN2W3	小ネジ＋TRUS	LP-7AWH (WK28140)	4	
30d	**--**	CORD CLAMP SET		コードクランプセット	(WK89080)		
30da	**VP59210R**	CORD CLAMPER DKN-5B(VHB)	DKN-5(VHB)	NKクランプ		3	03
30da	**WB090800**	CORD CLAMPER	OD-5	CSクランプ		3	01
60	**WQ705900**	PEDAL ASSEMBLY		ペダルAss'y			12
* 80	**WQ624300**	PEDAL BOARD ASSEMBLY		ペダル框Ass'y	LP-7A		
* 80	**ZF998300**	PEDAL BOARD ASSEMBLY		ペダル框Ass'y	LP-7AWH		
	WQ705900	PEDAL ASSEMBLY		ペダルAss'y			12
P10	**WJ568500**	PEDAL PIECE		ペダル本体		3	07
P20	**--**	PEDAL CASE LOWER		ペダルケース下	(WJ56870)		
P30	**WJ646400**	PEDAL SPRING		ペダルスプリング		3	01
P40	**--**	PEDAL CASE UPPER		ペダルケース上	(WQ47860)		
P50	**WJ568800**	RUBBER CONTACT	2 DOME	ラバーコンタクト		3	07
P60	**WJ983300**	CIRCUIT BOARD	PEDAL	PEDALシート			03
P60a	**VB390100**	CONNECTOR	PH 5P TE	ベースポスト			
P70	**--**	STOPPER STAY ASSEMBLY		ストッパーステーAss'y	(WJ86730)		
P70a	**--**	STOPPER STAY		ストッパーステー	(WJ64630)		
P70b	**WJ867400**	STOPPER FELT		ストッパーフェルト		3	01
P80	**WJ961900**	PK CABLE		PKケーブル			12
P90	**WE774300**	BIND HEAD B-TIGHT SCREW	3.0X8 MFZN2W3	Bタイト＋BIND		6	
P100	**WM142600**	ARTIFICIAL LEATHER	24 24 BLACK	人工皮革		3	01
P110	**--**	GREASE DRY	HANARL FL-78E	ハナール	(WR65030)		
P120	**--**	RUBBER FOOT		ペダルゴム脚	(WJ96240)	3	
P130	**--**	RUBBER FOOT REAR		ペダルゴム脚後	(WJ96250)	2	
P140	**--**	PEDAL COVER PLATE	CL	ペダル蓋金具	(WK04350)		
P150	**WF026000**	FLAT HEAD TAPPING SCREW-B	3.0X8 MFZN2W3	Bタイト＋FLAT		3	01
P160	**WK720200**	BIND HEAD TAPPING SCREW-B	4.0X25 MFZN2W3	Bタイト＋BIND		14	01
P170	**--**	PEDAL ANGLE	2.0 L MFZN2W3	ペダルアングル	(WP08600)	2	
P180	**WE98120R**	BIND HEAD TAPPING SCREW-B	4.0X12 MFZN2W3	Bタイト＋BIND		4	01

* : New Parts

RANK : Japan only

Portable Grand

DGX-650B/DGX-650WH

OVERALL CIRCUIT DIAGRAM

DGX-650B

DGX-650WH

CL 001889

YAMAHA

HAMAMATSU, JAPAN

AdM ⓘPrinted in Japan '13.06

DGX-650B/DGX-650WH OVERALL CIRCUIT DIAGRAM 1/7 (DM (1/4))

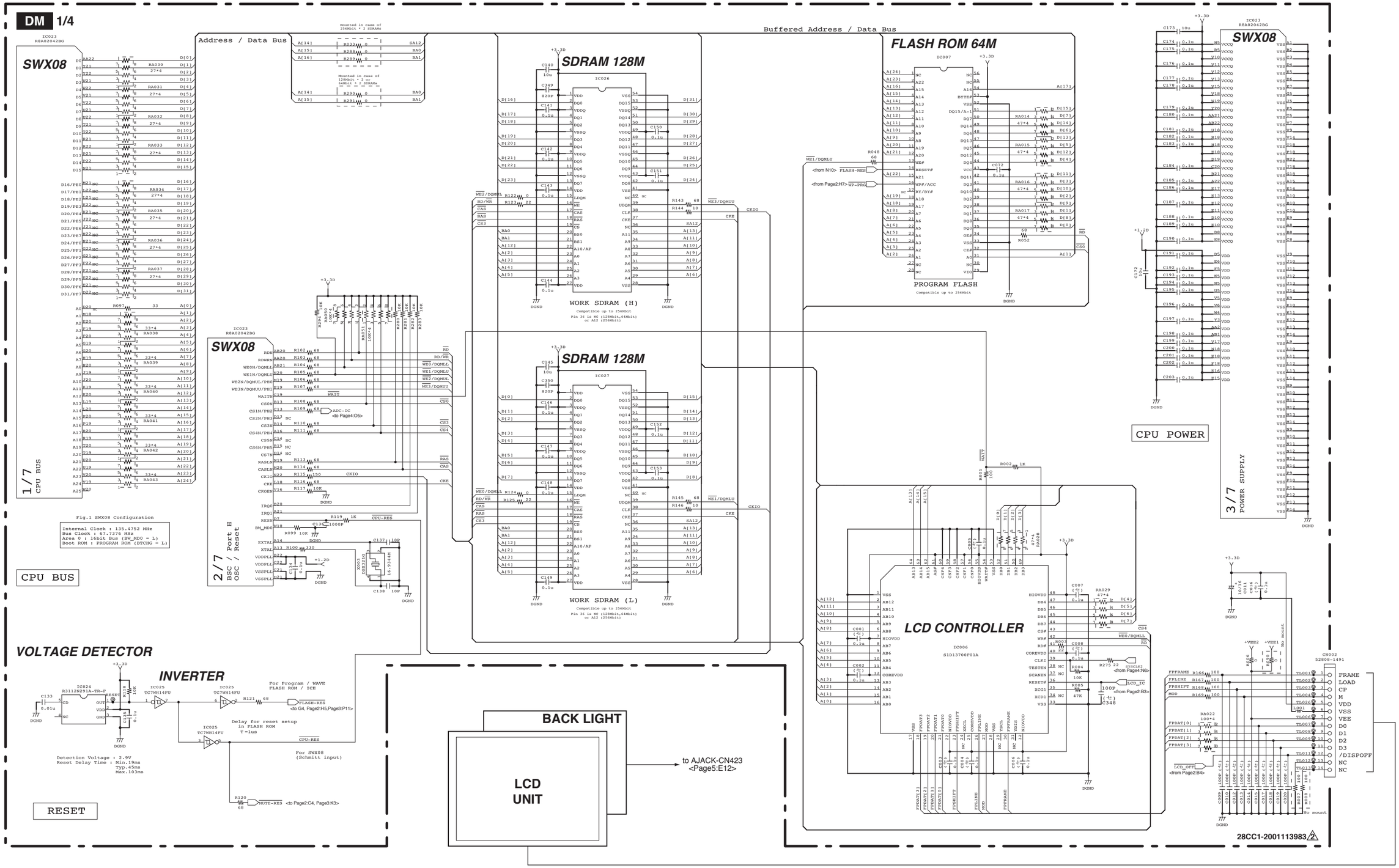

DGX-650B/DGX-650WH OVERALL CIRCUIT DIAGRAM 2/7 (DM (2/4))

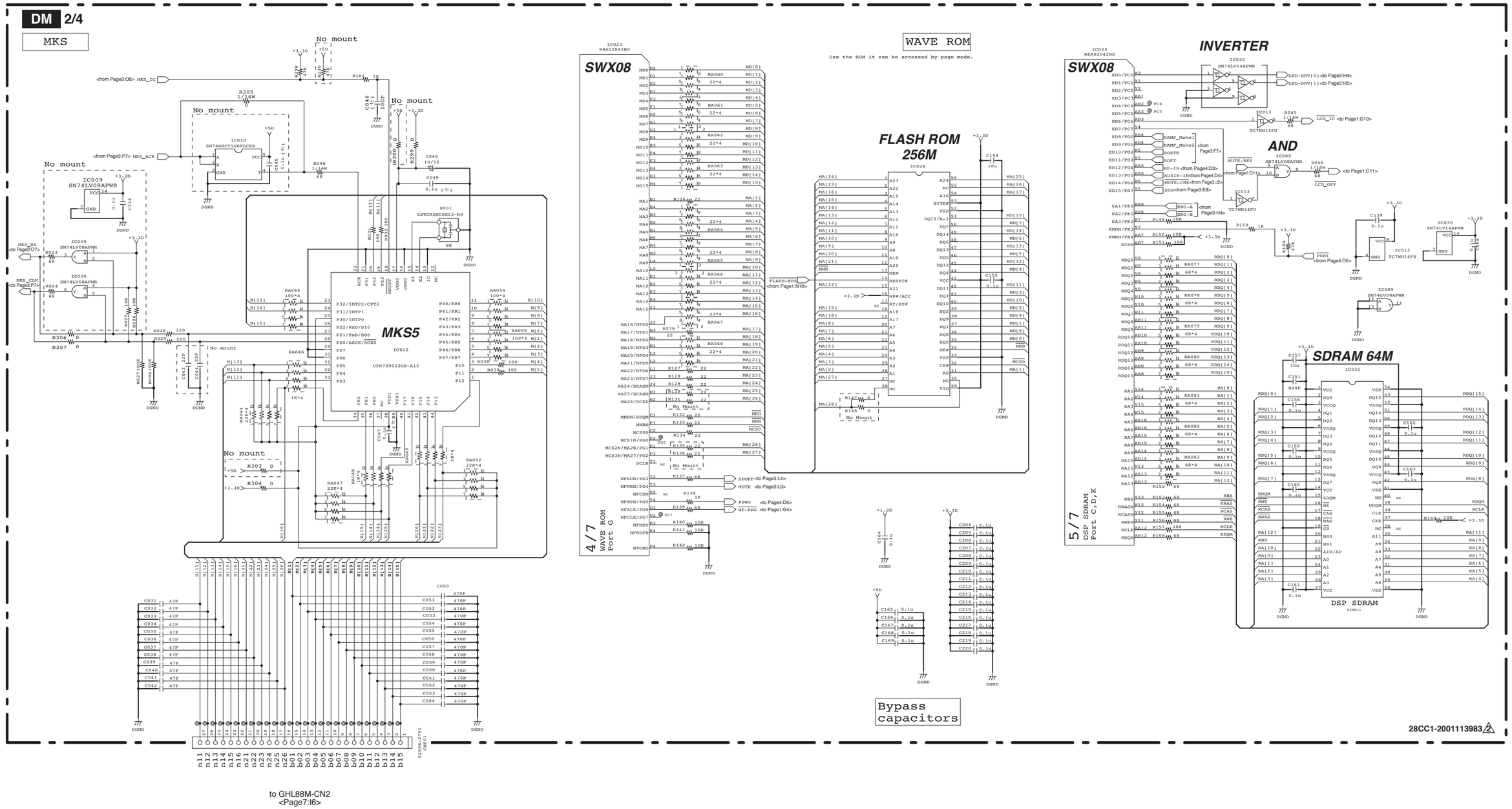

DGX-650B/DGX-650WH OVERALL CIRCUIT DIAGRAM 3/7 (DM (3/4))

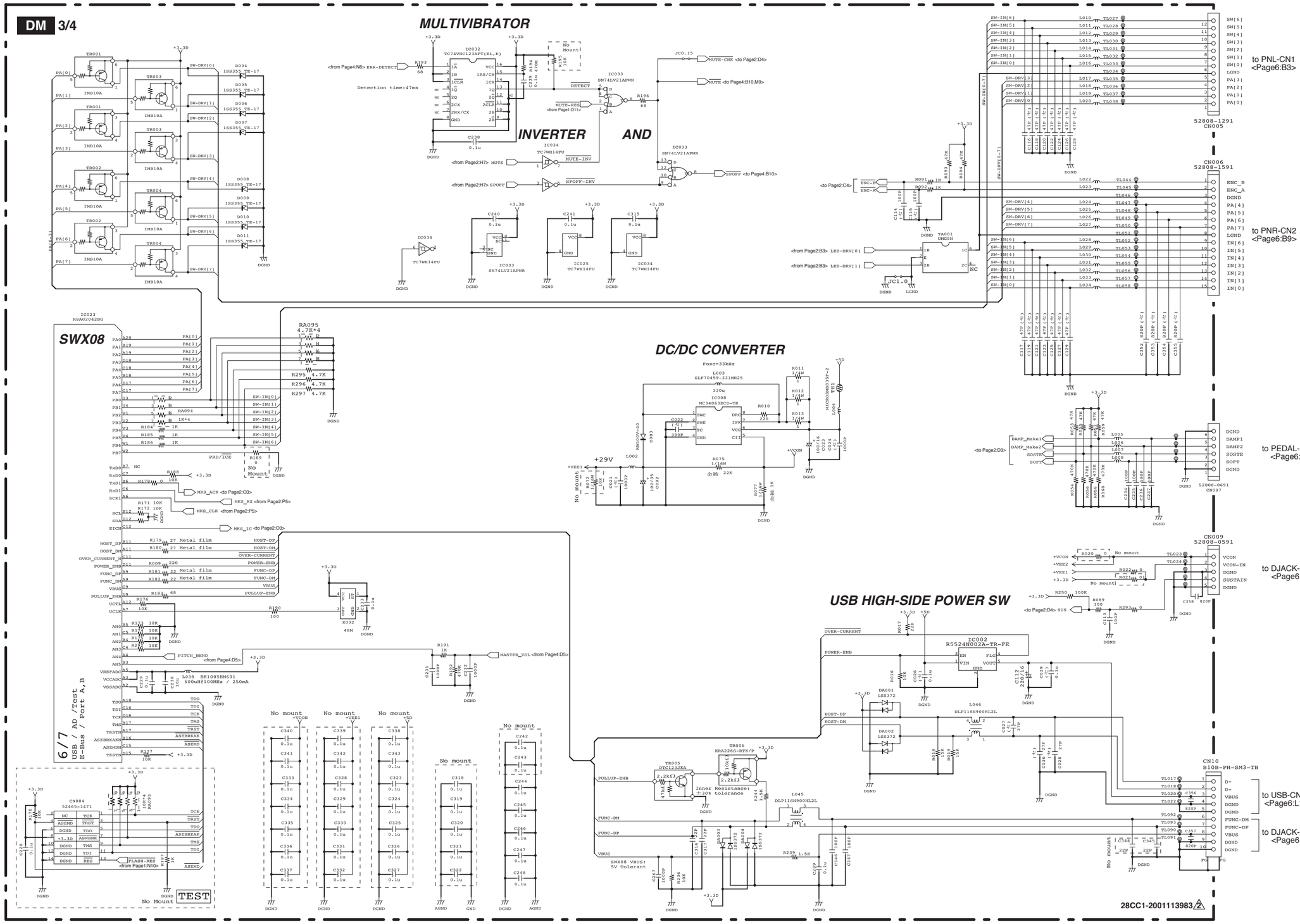

DGX-650B/DGX-650WH OVERALL CIRCUIT DIAGRAM 4/7 (DM (4/4))

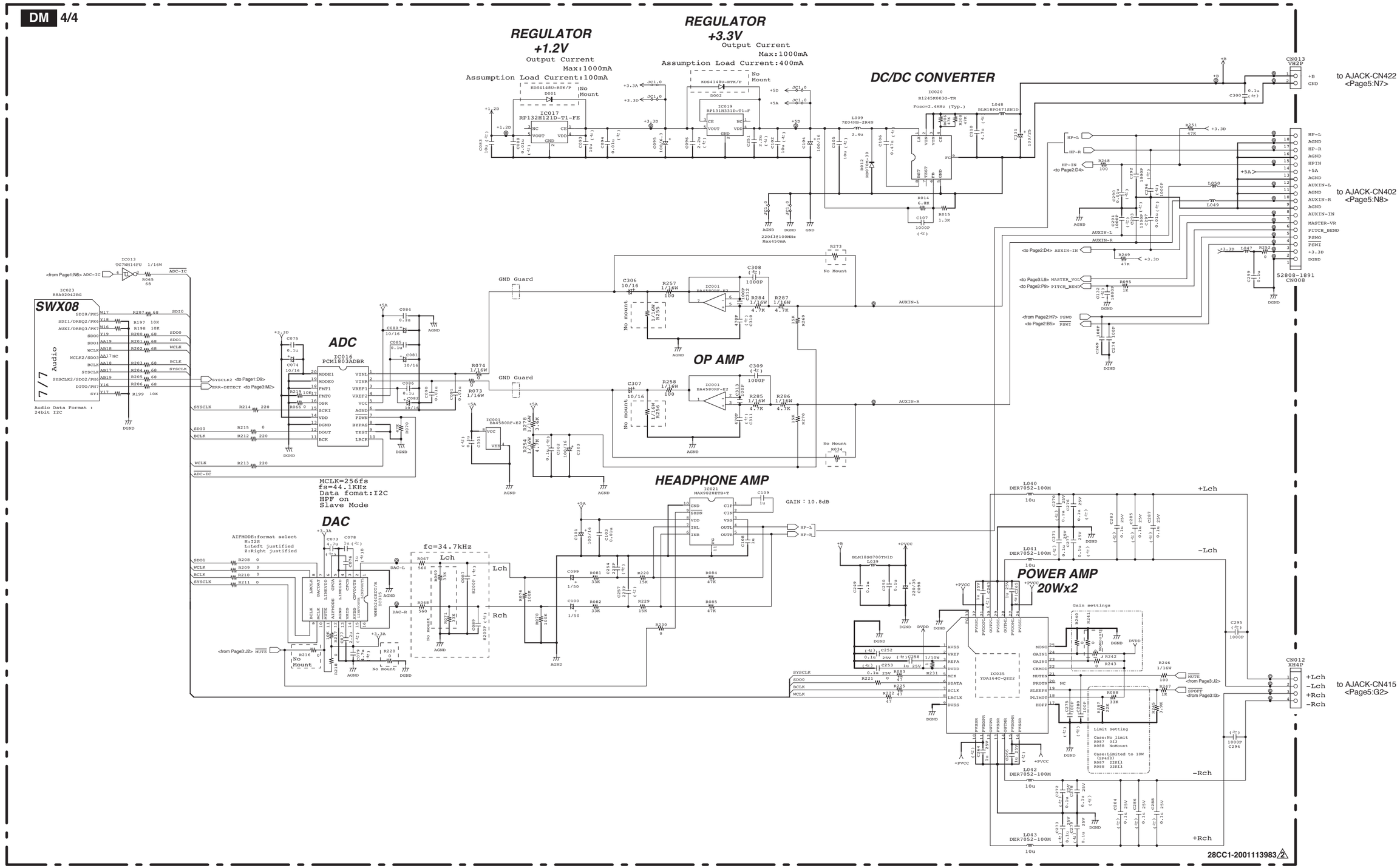

■ DGX-650B/DGX-650WH OVERALL CIRCUIT DIAGRAM 5/7 (AJACK, MVR, PB, PWR)

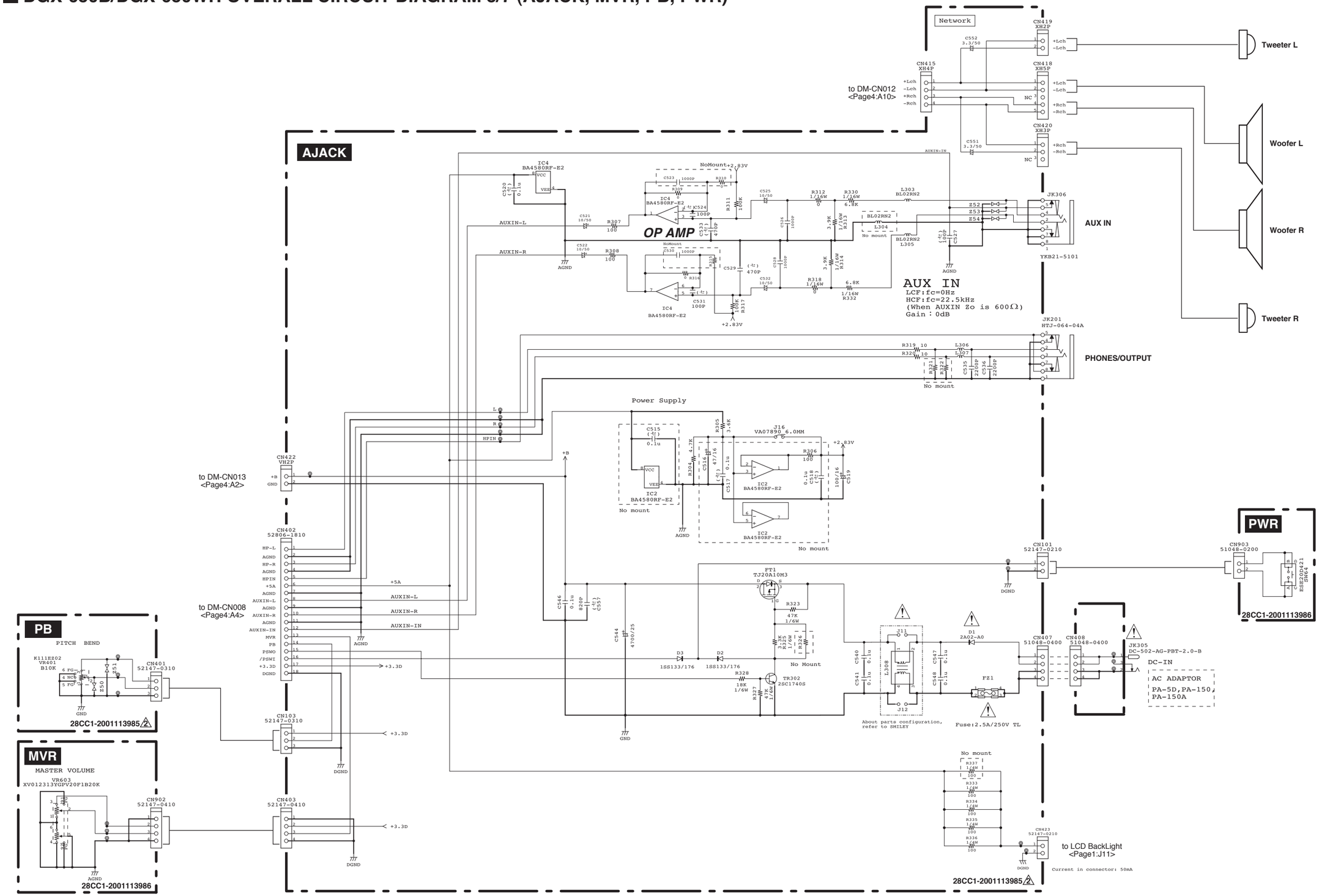

■ DGX-650B/DGX-650WH OVERALL CIRCUIT DIAGRAM 6/7 (DJACK, ENC, PEDAL, PNL, PNR, USB)

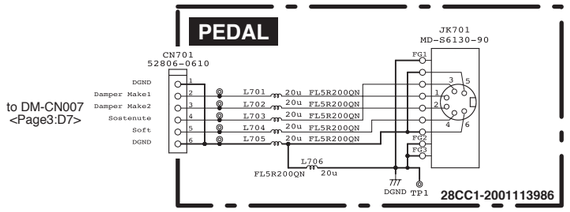

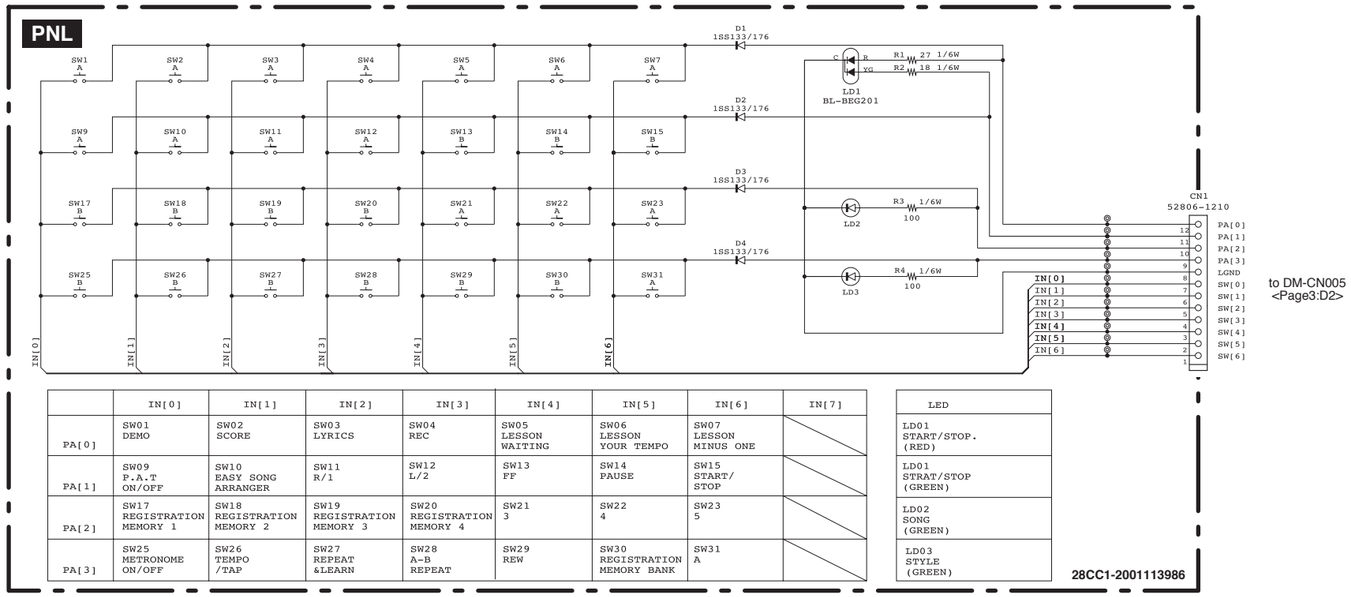

	IN[0]	IN[1]	IN[2]	IN[3]	IN[4]	IN[5]	IN[6]	IN[7]
PA[0]	SW01 DEMO	SW02 SCORE	SW03 LYRICS	SW04 REC	SW05 LESSON WAITING	SW06 LESSON YOUR TEMPO	SW07 LESSON MINUS ONE	
PA[1]	SW09 P.A.T ON/OFF	SW10 EASY SONG ARRANGER	SW11 R/1	SW12 L/2	SW13 FF	SW14 PAUSE	SW15 START/ STOP	
PA[2]	SW17 REGISTRATION MEMORY 1	SW18 REGISTRATION MEMORY 2	SW19 REGISTRATION MEMORY 3	SW20 REGISTRATION MEMORY 4	SW21 3	SW22 4	SW23 5	
PA[3]	SW25 METRONOME ON/OFF	SW26 TEMPO /TAP	SW27 REPEAT &LEARN	SW28 A-B REPEAT	SW29 REW	SW30 REGISTRATION MEMORY BANK	SW31 A	

LED
LD01 START/STOP. (RED)
LD01 STRAT/STOP (GREEN)
LD02 SONG (GREEN)
LD03 STYLE (GREEN)

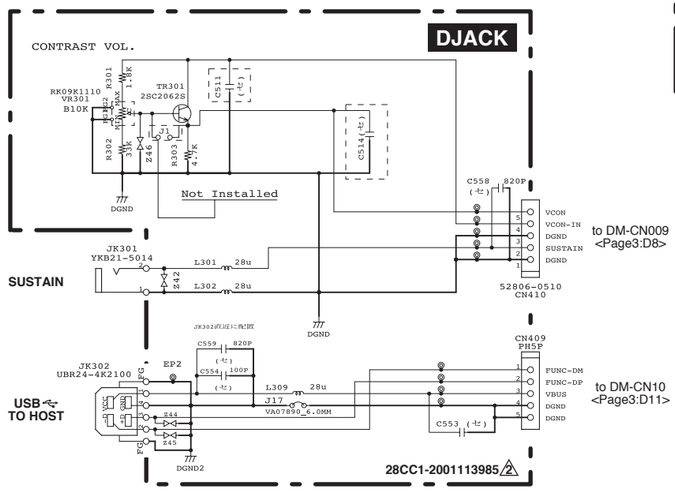

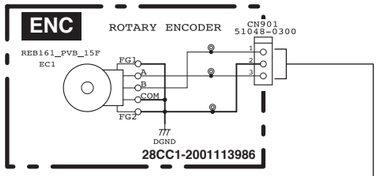

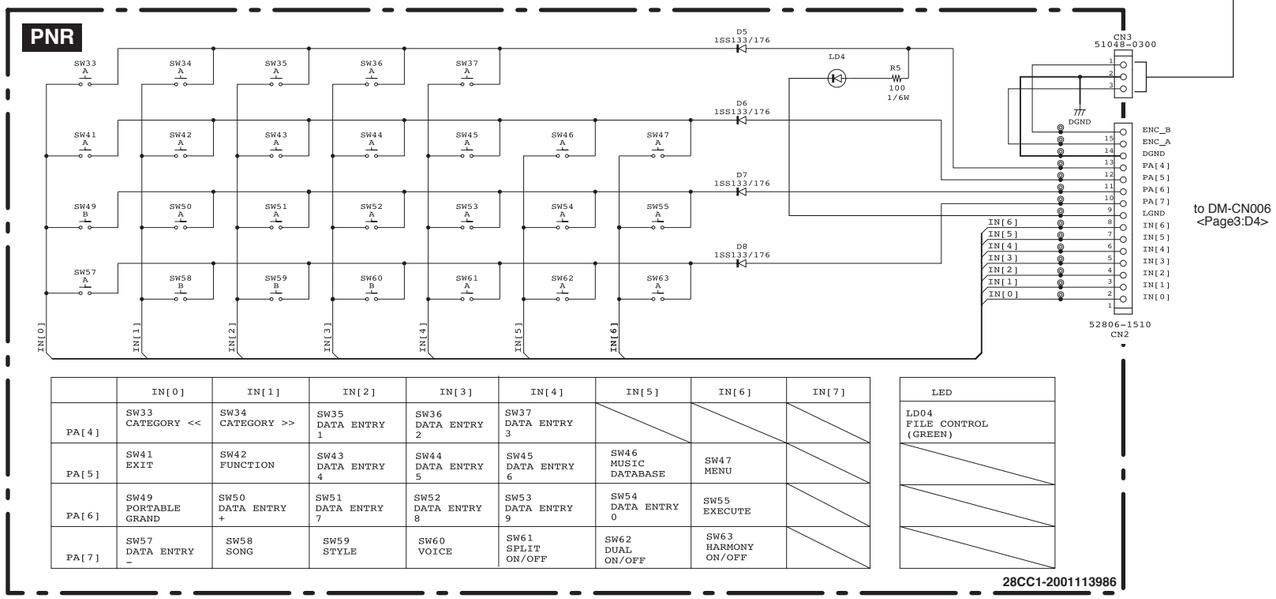

	IN[0]	IN[1]	IN[2]	IN[3]	IN[4]	IN[5]	IN[6]	IN[7]
PA[4]	SW33 CATEGORY <<	SW34 CATEGORY >>	SW35 DATA ENTRY 1	SW36 DATA ENTRY 2	SW37 DATA ENTRY 3			
PA[5]	SW41 EXIT	SW42 FUNCTION	SW43 DATA ENTRY 4	SW44 DATA ENTRY 5	SW45 DATA ENTRY 6	SW46 MUSIC DATABASE	SW47 MENU	
PA[6]	SW49 PORTABLE GRAND	SW50 DATA ENTRY +	SW51 DATA ENTRY 7	SW52 DATA ENTRY 8	SW53 DATA ENTRY 9	SW54 DATA ENTRY 0	SW55 EXECUTE	
PA[7]	SW57 DATA ENTRY -	SW58 SONG	SW59 STYLE	SW60 VOICE	SW61 SPLIT ON/OFF	SW62 DUAL ON/OFF	SW63 HARMONY ON/OFF	

LED
LD04 FILE CONTROL (GREEN)

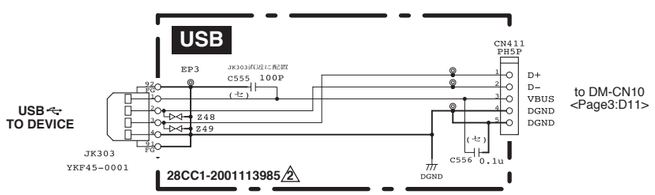

■ DGX-650B/DGX-650WH OVERALL CIRCUIT DIAGRAM 7/7 (GHL88H, GHL88L, GHL88M)